# SERVICE MANUAL

# TA135AV/TA170AV

marantz®

model TA135AV/TA170AV

*Stereo System Component*

## MARANTZ DESIGN AND SERVICE

Using superior design and selected high grade components, MARANTZ company has created the ultimate in stereo sound. Only **original MARANTZ parts** can insure that your MARANTZ product will continue to perform to the specifications for which it is famous.

Parts for your MARANTZ equipment are generally available to our National Marantz Subsidiary or Agent.

**ORDERING PARTS:**
Parts can be ordered either by mail or by telex. In both cases, MARANTZ part number has to be specified. If you order by mail, fulfil MARANTZ order forms.

MARANTZ S.A.
EUROPEAN PARTS DEPARTMENT
2, Avenue Léopold III
B-7120 PERONNES-lez-BINCHE
BELGIUM
TWX: 57589 SEPLT B

MARANTZ NATIONAL PARTS DEPARTMENT
20525 Nordhoff Street
Chatsworth, California 91311
Phone: 1-800-423-5108
Phone: 1-213-998-9333

The following information must be supplied to eliminate delays in processing your order:

1. Complete address
2. Complete part numbers and quantities required
3. Description of parts
4. Model number for which part is required
5. Way of shipment
6. Signature: any order form or telex must be signed otherwise such part order will be considered as null and void.

**PARTS ORDERING:**
Parts may be ordered from the following addresses:

### EUROPE

**MARANTZ S.A.**
European Parts Department
2, Avenue Léopold III
B-7120 Péronnes-lez-Binche
Belgium
Telex: 57589

**MARANTZ FRANCE**
4 Rue Bernard Palissy
92600 Asnières
France
Telex: 611651

**MARANTZ DENMARK**
Bregnerødvej 132b
3460 Birkerød
Denmark
Telex: 39137

**MARANTZ AUSTRIA Ge.M.B.H.**
25 Franz Lisztgasse
2380 Perchtoldsdorf
Austria
Telex: 113583

**MARANTZ EUROPE S.A.**
326 Avenue Louise Bte 32
1050 Brussels
Belgium
Telex: 26602

**MARANTZ SVENSKA A.B.**
Aldermansvägen 10-21
Box 1240
171 24 Solna
Sweden
Telex: 13449

**MARANTZ BELGIUM**
45 Rue Auguste Van Zande
1080 Brussels
Belgium

**MARANTZ TRADING S.A.**
326 Avenue Louise Bte 32
1050 Brussels
Belgium

**MARANTZ**
De Limiet 3
4131 N.R. Vianen
The Netherlands

**MARANTZ ITALIANA S.p.A.**
Via Montenapoleone 10
20121 Milano
Italia

**MARANTZ AUDIO U.K. LTD.**
Unit 15/16
Saxon Way Industrial Estate
Moor Lane
Harmondsworth UB7 OLW
Great Britain
Telex: 935196

**MARANTZ GERMANY G.M.B.H.**
Max-Planck-Straße 22
6072 Dreieich 1
Germany
Telex: 4185316

**AL ALAMIAH ELECTRONICS**
Ussama Building
Fahd Saleem Street
P.O. Box 23781
Safat-Kuweit

**AL ALAMIAH ELECTRONICS**
P.O. Box 5954
University Street
Riyadh 11432
Saudi Arabia

### AUSTRALIA

**MARANTZ AUSTRALIA PTY., LTD.**
19 Chard Road
Brookvale, NSW 2100
Australia
Telex: 24121

### U.S.A.

**MARANTZ COMPANY, INC.**
National Service Dept.
P.O. Box 577
Chatsworth, CA 91311
U.S.A.
Telex: 4720284

### JAPAN

**MARANTZ JAPAN, INC.**
35-1, 7-chome, Sagamiono
Sagamihara-shi, Kanagawa
Japan
Telex: 22878

All of the above locations are fully equipped to take care of your total service needs. Because various countries have differing configuration requirements, it is necessary that you contact the service facility in your particular country. In the event that there is no service location listed for your country, please, contact the nearest facility for the necessary assistance.

> In case of difficulties, do not hesitate to contact the Technical Department at abovementioned address.

**NOTE—FOR U.S.A. ONLY**
Parts for your MARANTZ stereo are generally available within 72 hours throughout the nation via a toll-free line to our National Parts Depot in California. The sales professionals who take your call immediately refer to their own desk top computer terminal and can quickly determine the availability and price information you require. If, for some reason, your order should exceed our available stock, we usually can instantly provide an alternate replacement part or current delivery information. When the order is placed and confirmed, the computer simultaneously generates "hard copy" orders at the distribution center. As hard copies come directly from the computer to the national parts depot, your requested stock is assembled and prepared for shipment and placed on the first available carrier for delivery to you.

Phone orders will eliminate mail delays, and we encourage the use of this method. If you order by mail, use MARANTZ parts order forms which are available from MARANTZ NATIONAL PARTS DEPARTMENT.

marantz®

# TABLE OF CONTENTS


| SECTION | | PAGE |
|---|---|---|
| 1. | SHOCK, FIRE HAZARD SERVICE TEST | 1 |
| 2. | P.W. BOARDS | 1 |
| 3. | TEST EQUIPMENT REQUIRED FOR SERVICING | 2 |
| 4. | TUNER ALIGNMENT PROCEDURES | 2 |
| 5. | TEST AND ALIGNMENT POINTS | 4 |
| 6. | CIRCUIT DESCRIPTION | 5 |
| 7. | BLOCK DIAGRAM | 9 |
| 8. | COMPONENT LOCATIONS | 10 |
| 8.1 | Tuner Preset Assembly (PC04) Component Locations | 10 |
| 8.2 | Power Meter, Function Indicator Assembly (PX54) Component Locations | 11 |
| 8.3 | Volume Indicator Assembly (PG84) Component Locations | 11 |
| 8.4 | Main Amp/Power Supply Assembly (P704) Component Locations | 12 |
| 8.5 | Loudness. Monitor Switch Assembly (PG54) Component Locations | 13 |
| 8.6 | Signal Meter Assembly (PX04) Component Locations | 13 |
| 8.7 | Video Buffer Assembly (PL04) Component Locations | 13 |
| 8.8 | Speaker Switch, Headphone Jack Assembly (PT04) Component Locations | 13 |
| 8.9 | Power Switch Assembly (PP04) Component Locations | 14 |
| 8.10 | CD Remocon Output Assembly (PQ74) Component Locations | 14 |
| 8.11 | Remot Pause Out Assembly (PW04) Component Locations | 14 |
| 8.12 | VCR, LV Assembly (PS14) Component Locations | 14 |
| 8.13 | Tuner Assembly (P104) Component Locations | 14 |
| 8.14 | Tuner Logic Control Assembly (PR04) Component Locations | 15 |
| 8.15 | Audio Logic Control Assembly (PU54) Component Locations | 15 |
| 8.16 | Back Up Power Supply Assembly (P854) Component Locations | 15 |
| 8.17 | G. Equalizer Assembly (PE04) Component Locations | 16 |
| 8.18 | Pre Out/Main In Assembly (PW54) Component Locations | 16 |
| 8.19 | RCA Pin, Phone Function, Elect Volume Assembly (PS04) Component Locations | 16 |
| 9. | EXPLODED VIEW AND PARTS LIST | 17 |
| 10. | ELECTRICAL PARTS LIST | 19 |
| 11. | TECHNICAL SPECIFICATIONS | 25 |
| 12. | SCHEMATIC DIAGRAM | 26 |


## How to use this service manual

- The "Common parts" which Marantz Japan, Inc. has established are eliminated from this service manual.
- These "Common parts" are applied to all models in the service manuals arranged and issued by MJI.
- To indicate clearly the common parts in the schematic diagram, a line is drawn above or under the Ref. Desig. No. of applicable parts.
- "Common parts" can be supplied from the Marantz service center as ever.
  In case of ordering, please establish the parts number of 10 figures following the procedure mentioned in this service manual "How to establish the parts number for common parts".

**(NOTE)**

When you order parts to the Marantz parts center, please take notice of the following points.

1) Please correctly write the parts number of 10 figures following the rule.
2) Since ordering parts by the Ref. Desig. No. or ratings indicated in the schematic diagram does not satisfy the above conditions, the Marantz parts supply system does not work properly.
   As this case is apt to cause a trouble, please pay attention to it.

# MARANTZ MODEL TA135AV/TA170AV STEREO SYSTEM COMPONENT

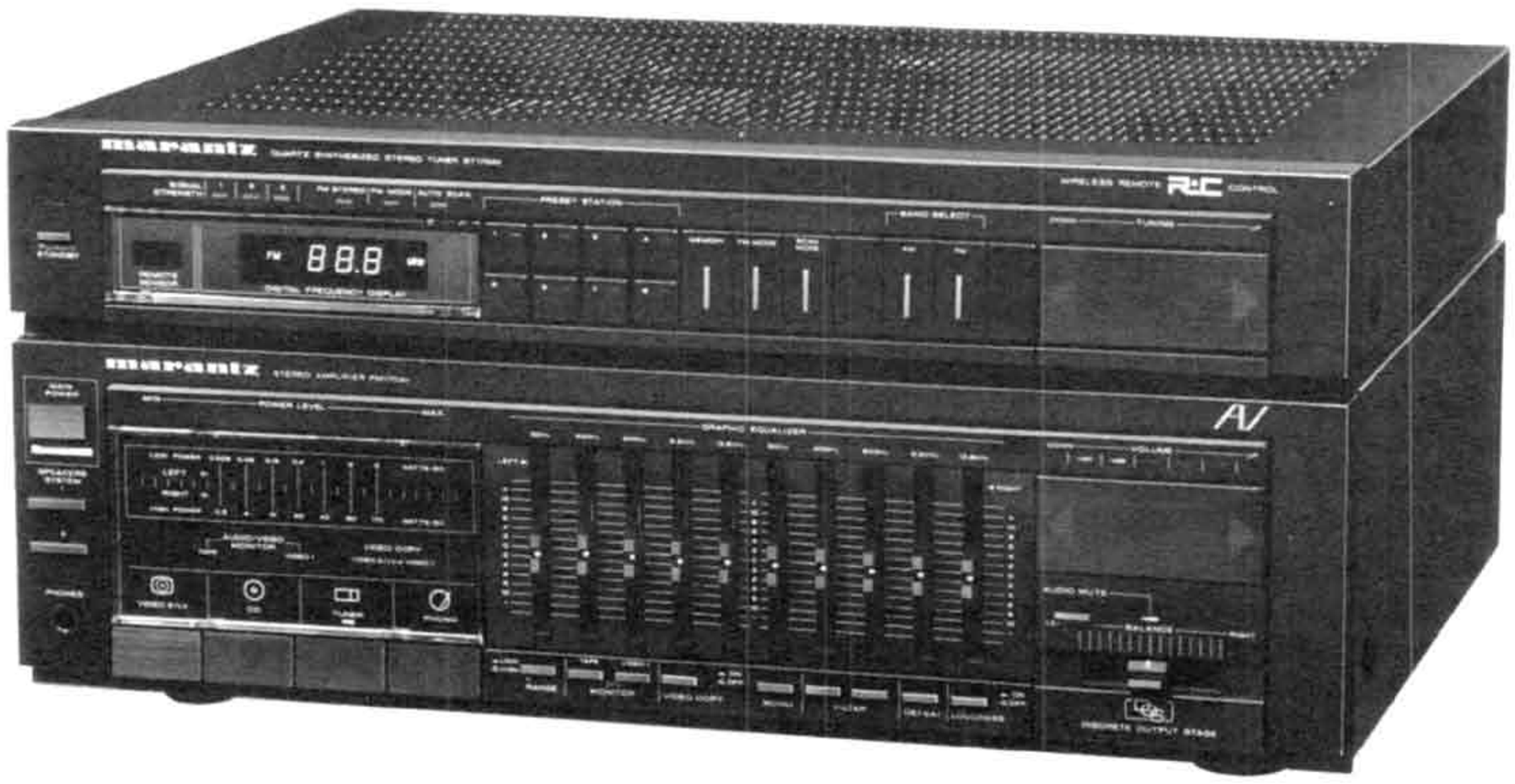

**CAUTION**

This service manual explains them by extracting the different specifications from those of the TA110/TA150, based on the TA110/TA150. For both electrical and mechanical information on the after-sales service which is not stated, all information is described in the TA110/TA150 service manual. The dispatch of the parts for after-sales service has to be referred to this service manual, with the first priority. For this reason, please use this service manual with referring to the TA110/TA150 service manual, without fail.

## 1. SHOCK, FIRE HAZARD SERVICE TEST

**CAUTION:** After servicing this appliance and prior to returning to customer, measure the resistance between either primary AC cord connector pins (with unit NOT connected to AC mains and its Power switch ON), and the face or Front Panel of product and controls and chassis bottom.

Any resistance measurement less than 1 Megohms should cause unit to be repaired or corrected before AC power is applied, and verified before return to user/customer.

Ref. UL Standard No. 1270. Para. 66. 3. D (Mandatory Test after servicing Electrical Appliances, effective 7-1-83).

## 2. P.W. BOARDS

As can be seen from the circuit diagram the chassis of Model TA135AV/TA170AV consists of the following unit. Each unit mounted on a printed circuit board is described within the square enclosed by a bold dotted line on the circuit diagram.

1. **Tuner . . . . . mounted on P.W. Board P104**
2. **Main Amp/ Power Supply . . . . . mounted on P.W. Board P704**
3. **Back Up Power Supply . . . . . mounted on P.W. Board P854**
4. **Tuner Preset . . . . . mounted on P.W. Board PC04**
5. **G. Equalizer . . . . . mounted on P.W. Board PE04**
6. **Loudness Monitor Switch . . . . mounted on P.W. Board PG54**
7. **Volume Indicator . . . mounted on P.W. Board PG84**
8. **Video Buffer . . . . . mounted on P.W. Board PL04**
9. **Power Switch . . . . . mounted on P.W. Board PP04**
10. **CD Remocon Output mounted on P.W. Board PQ74**
11. **Tuner Logic Control . mounted on P.W. Board PR04**
12. **RCA Pin, Phone Function Elect Volume . . . . . mounted on P.W. Board PS04**
13. **VCR LV . . . . . mounted on P.W. Board PS14**
14. **Speaker Switch, Headphone Jack . . . . mounted on P.W. Board PT04**
15. **Audio Logic Control . mounted on P.W. Board PU54**
16. **Remot Pause Out . . . mounted on P.W. Board PW04**
17. **Pre Out/Main In . . . . mounted on P.W. Board PW54**
18. **Signal Meter . . . . . mounted on P.W. Board PX04**
19. **Power Meter, Function Indicator . . mounted on P.W. Board PX54**

## 3. TEST EQUIPMENT REQUIRED FOR SERVICING

This table lists the test equipment required for servicing the Model TA135AV/TA170AV Stereo System Component.

| Item | Use |
|---|---|
| AM Signal Generator | Signal source for AM alignment |
| Test Loop | Use with AM Signal Generator |
| FM Signal Generator | Signal sorce for FM alignment |
| MPX Signal Generator | Stereo separation alignment and trouble shooting |
| Distortion Analyzer | Distortion measurements |
| Audio Oscillator | Sinewave and squarewave signal source |
| AC VTVM | Voltage measurements (AC) |
| Oscilloscope | Waveform analysis trouble shooting |
| Frequency Counter | MPX Oscillator adjustment (VCO) |
| Circuit Tester | Trouble shooting |
| DC VTVM | Voltage measurements (DC) |
| AC Wattmeter | Monitors primary power to tuner |
| Line Voltmeter | Monitors potential of primary power to tuner |
| Variable Autotransformer | Adjusts level of primary power to tuner |
| Shorting Plug | Shorts amplifier Input to eliminate nois pickup |

## 4. TUNER ALIGNMENT PROCEDURES

A dummy resistor of 47 kohms must be connected across the tuner output terminals before alignment.

### 4.1 FM Alignment Procedures (Function switch in the "FM" position, MODE switch in the MONO position.)

1. FM RF Alignment

| Step | Signal Source Connection | Signal Frequency | Indicator Connection | Set the Digital Readout Frequency | Adjust: |
|---|---|---|---|---|---|
| 1 | FM signal generator to FM antenna terminal (300Ω) through matching network Set the SG RF output level so that some noise can be observed on the upper and lower side of the output waveform. | 98.00 MHz | VTVM to L or R channel output Tape out (JS02) | 98.00 MHz | FRONT END IFT (A101: L8) for maximum output and minimum distortion. |
| 2 | FM signal generator 1 mV output to FM antenna terminal (300Ω) through matching network Modulation Level IHF 75 kHz DEV. | 98.00 MHz | "O" center meter or DC current meter in 100 μA range between (J201,–J202) | 98.00 MHz | L201 (Primary) core so that the meter indicates its center or may read "O". |
| 3 | FM signal generator 1 mV output to FM antenna terminal (300Ω) through matching network. | 98.00 MHz | Distortion meter to L or R channel output Tape out (JS02) | 98.00 MHz | L201 (Secondary) core for minimum distortion. |

## 4.2 Muting Level Alignment (Function switch in the "FM" position, MODE switch in the "AUTO STEREO" position.)

| Step | Signal Source Connection | Signal Frequency | Indicator Connection | Set the Digital Readout Frequency | Adjust: |
|---|---|---|---|---|---|
| 1 | FM signal generator 12.5 μV output to FM antenna terminal through matching network (300 ohm, balanced) | 98.00 MHz | VTVM to L or R channel output Tape out (JS02) | 98.00 MHz | Adjust R215 until output is developed. |

## 4.3 Multiplex Alignment Procedures (Function switch in the "FM" position, MODE switch in the "AUTO STEREO" position.)

| Step | Signal Source Connection | Signal Frequency | Indicator Connection | Set the Digital Readout Frequency | Adjust: |
|---|---|---|---|---|---|
| 1 | FM signal generator 1 mV output modulated by MPX signal generator to FM antenna terminal (300Ω) through matching network Modulation Level IHF 67.5kHz+9% Pilot DEV. | No modulation | Frequency counter to (J301–J302) | 98.00 MHz | R303 so that Frequency may precisely read 19,000 kHz ±10 Hz. |
| 2 | | Stereo left (1,000 Hz) | VTVM to right channel output (JS02. R ch) | | R317 for same separation in both channels. |
| 3 | | Stereo right (1,000 Hz) | VTVM to left channel output (JS02. L ch) | | |

## 4.4 AM Alignment Procedures (Function switch in the "AM" position.)

### 1. AM IF Alignment

| Step | Signal Source Connection | Signal Frequency | Indicator Connection | Set the Digital Readout Frequency | Adjust: |
|---|---|---|---|---|---|
| 1 | Sweep generator to AM Antenna Terminal. | 450 kHz marker | Oscilloscope to (RA27) | ——— | LA05 for maximum and symmetric response. |

### AM RF Alignment

| Step | Signal Source Connection | Signal Frequency | Indicator Connection | Set the Digital Readout Frequency | Adjust: |
|---|---|---|---|---|---|
| 1 | Apply the signal to the AM loop antenna from the AM signal generator using the test loop. | 600 kHz | VTVM to L or R channel output Tape out (JS02) | 600 kHz | LA01 for maximum output. |
| 2 | | 1,400 kHz | | 1,400 kHz | CA02 for maximum output. |
| 3 | Repeat steps 1 and 2. | | | | |

### AM Signal Alignment (Function switch in the "AM" position)

| Step | Signal Source Connection | Signal Frequency | Indicator Connection | Set the Digital Readout Frequency | Adjust: |
|---|---|---|---|---|---|
| 1 | Apply a signal to the AM loop antenna from the RF generator via the test test loop. 5 mV signal | 1,000 kHz | ——— | 1,000 kHz | Adjust RA24 so that 3 signal LEDs light. (DX01, DX02, DX03) |

### 4.5 Audio adjustment

1. Idling adjustment
   a) Connect a digital voltmeter between TP1 and TP3.
   b) Adjust to 8 mV by R717.
   c) In the same manner, adjust R CH using TP2, TP3, and R718.

   **Note 1:** Adjustment is made with no signal.
   **2:** Adjustment is made after a heat run of one minute after the power is turned on.

2. Power Meter adjustment
   a) Set the output to 8 ohm, 1 kHz, 170 W (135 W for TA135AV).
   b) Adjust RX89 and RX90 until the 7 th power meter LED is illuminated.
   c) Set the meter length to low and confirm it is within the specifications.

## 5. TEST AND ALIGNMENT POINTS

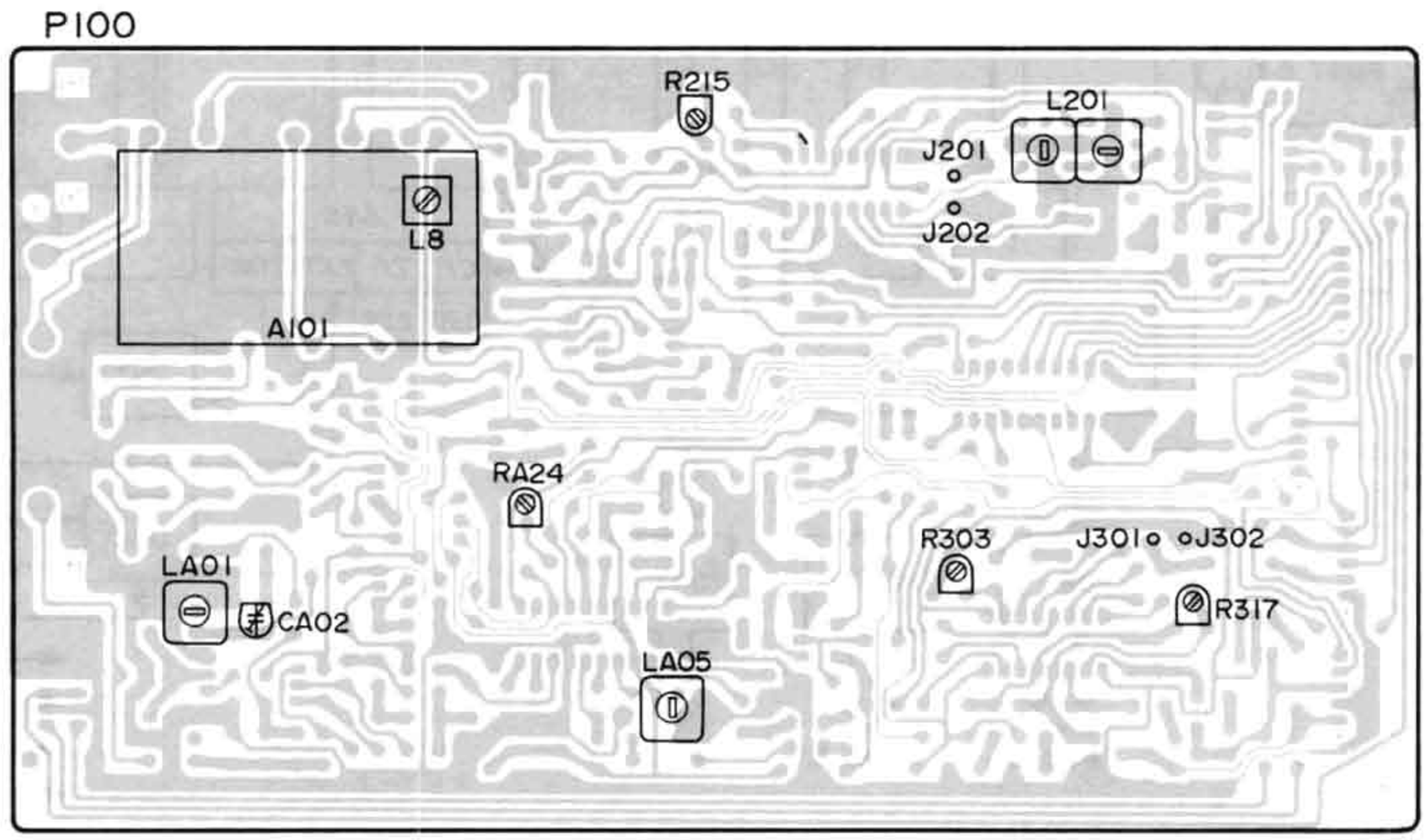

# 6. CIRCUIT DESCRIPTION

## SINGLE-CHIP 4-BIT MICROCOMPUTER LC6502C (QR01)

### BLOCK DIAGRAM

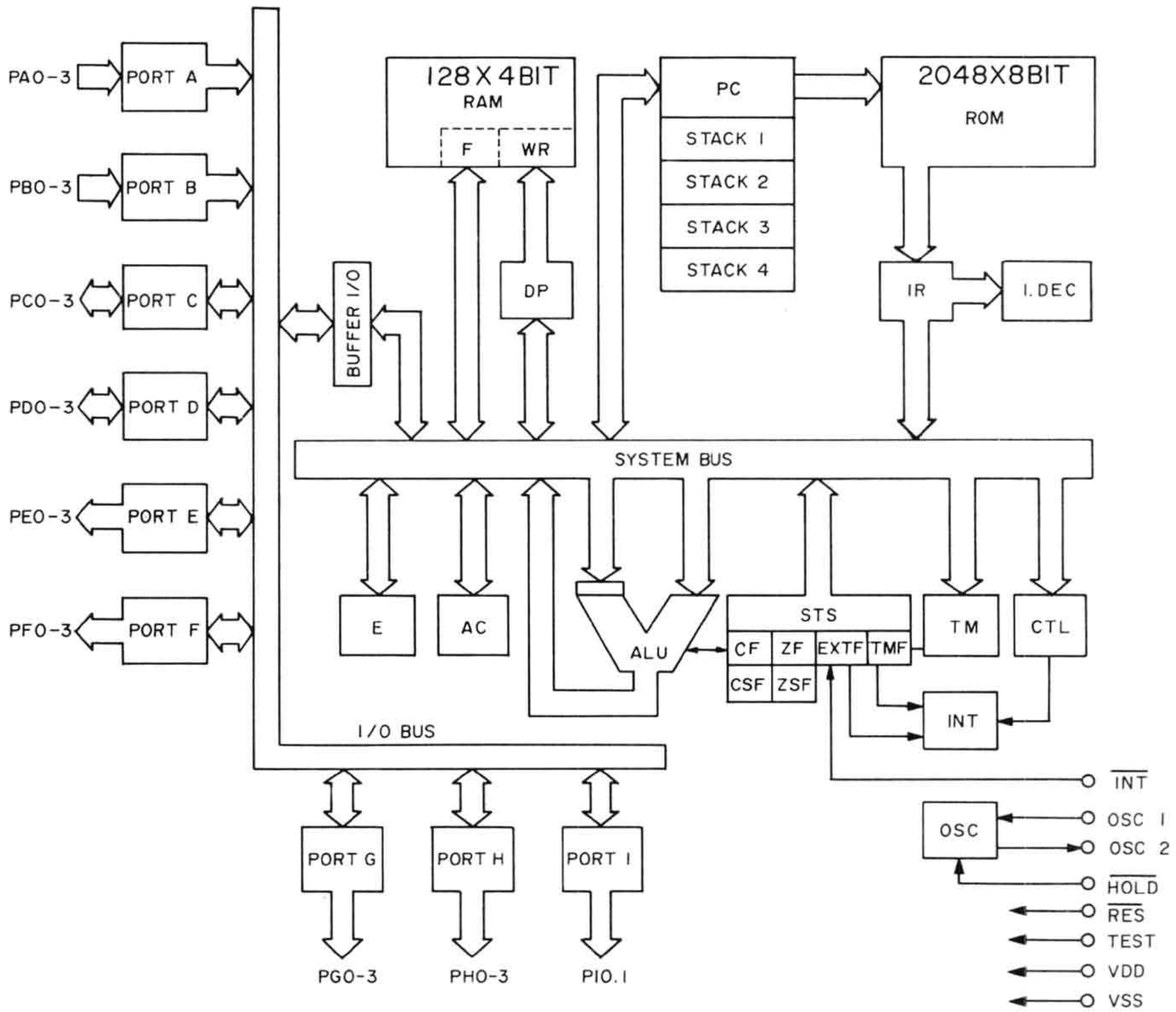


| | | | |
|---|---|---|---|
| RAM: | data memory | ROM: | program memory |
| F: | flag | PC: | program counter |
| WR: | working register | INT: | interrupt control |
| AC: | accumulator | IR: | instruction register |
| ALU: | logic calculation unit | I. DEC: | instruction decoder |
| DP: | data pointer | CF, CSF: | carry flag, carry save flag |
| E: | E register | ZF, ZSF: | zero flag, zero save flag |
| CTL: | control register | EXTF: | external interrupt request flag |
| OSC: | oscillator circuit | TMF. | internal interrupt request flag |
| TM: | timer | | |
| STS: | status register | | |

## Terminal Connections

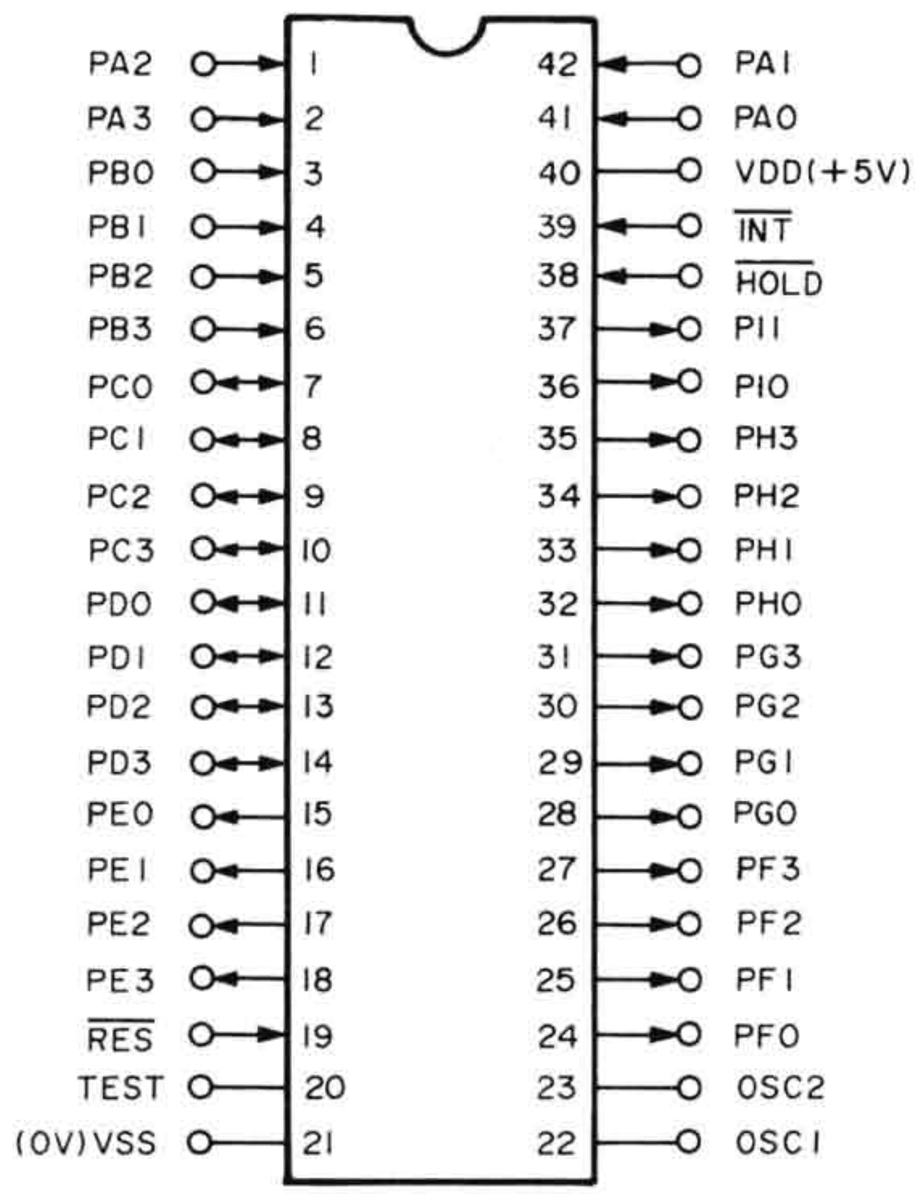


## Terminal Function

| Terminal Name | I/O | Function |
|---|---|---|
| $\overline{INT}$ | Input | Pseudo interrupt request input terminal. |
| $\overline{HOLD}$ | Input | Hold mode request input terminal. |
| $\overline{RES}$ | Input | Reset input terminal. |
| $PA_{3\text{-}0}$ | Input | Input ports $A_3$ to $A_0$<br>In input mode, 4-bit input and bit test are allowed.<br>Used for HALT mode release and request input. |
| $PB_{3\text{-}0}$ | Input | Input ports $B_3$ to $B_0$<br>In input mode, 4-bit input and bit test are allowed. |
| $PC_{3\text{-}0}$ | I/O | I/O ports $C_3$ to $C_0$<br>In input mode, 4-bit input and bit test are allowed.<br>In output mode, 4-bit output, bit set/reset output are allowed. |
| $PD_{3\text{-}0}$ | I/O | I/O ports $D_3$ to $D_0$<br>In input mode, 4-bit input and bit test are allowed.<br>In output mode, 4-bit output, bit set/reset output are allowed. |
| $PE_{3\text{-}0}$ | Output | Output ports $E_3$ to $E_0$<br>4-bit output and bit set/reset are allowed.<br>Input of output latch contents in 4-bit units and testing of output latch of bit is possible. |
| $PF_{3\text{-}0}$ | Output | Output ports $F_3$ to $F_0$<br>4-bit output and bit set/reset are allowed.<br>Input of output latch contents in 4-bit units and testing of output latch of bit is possible. |
| $PG_{3\text{-}0}$ | Output | Output port $G_3$ to $G_0$<br>4-bit output and bit set/reset are allowed.<br>Input of output latch contents in 4-bit units and testing of output latch of bit is possible. |
| $PH_{3\text{-}0}$ | Output | Output ports $H_3$ to $H_0$<br>4-bit output and bit set/reset are allowed.<br>Input of output latch contents in 4-bit units and testing of output latch of bit is possible. |
| $PI_{0,1}$ | Output | Output ports $I_{0,1}$<br>2-bit output and bit set/reset are allowed.<br>Input of output latch contents in 4-bit units and testing of output latch of bit is possible. |
| OSC1 | Input | Terminal operated with clock signal externally supplied.<br>A ceramic resonatoe and CR are connected to the space between the X'tal and this terminals when using the local clock signal oscillator. |
| OSC2 | Output | External terminal of the resonance circuit for local clock signal oscillation. |
| $V_{DD}$ | Input | Power terminal, usually connected to +5V. |
| $V_{SS}$ | | Connected to 0V of power supply. |
| TEST | Input | LSI test terminal, usually connected to $V_{SS}$ (0V). |

# 1-CHIP 4-BIT CONTROL MICROPROCESSOR LM6413E (QQ01)

## System Block Diagram

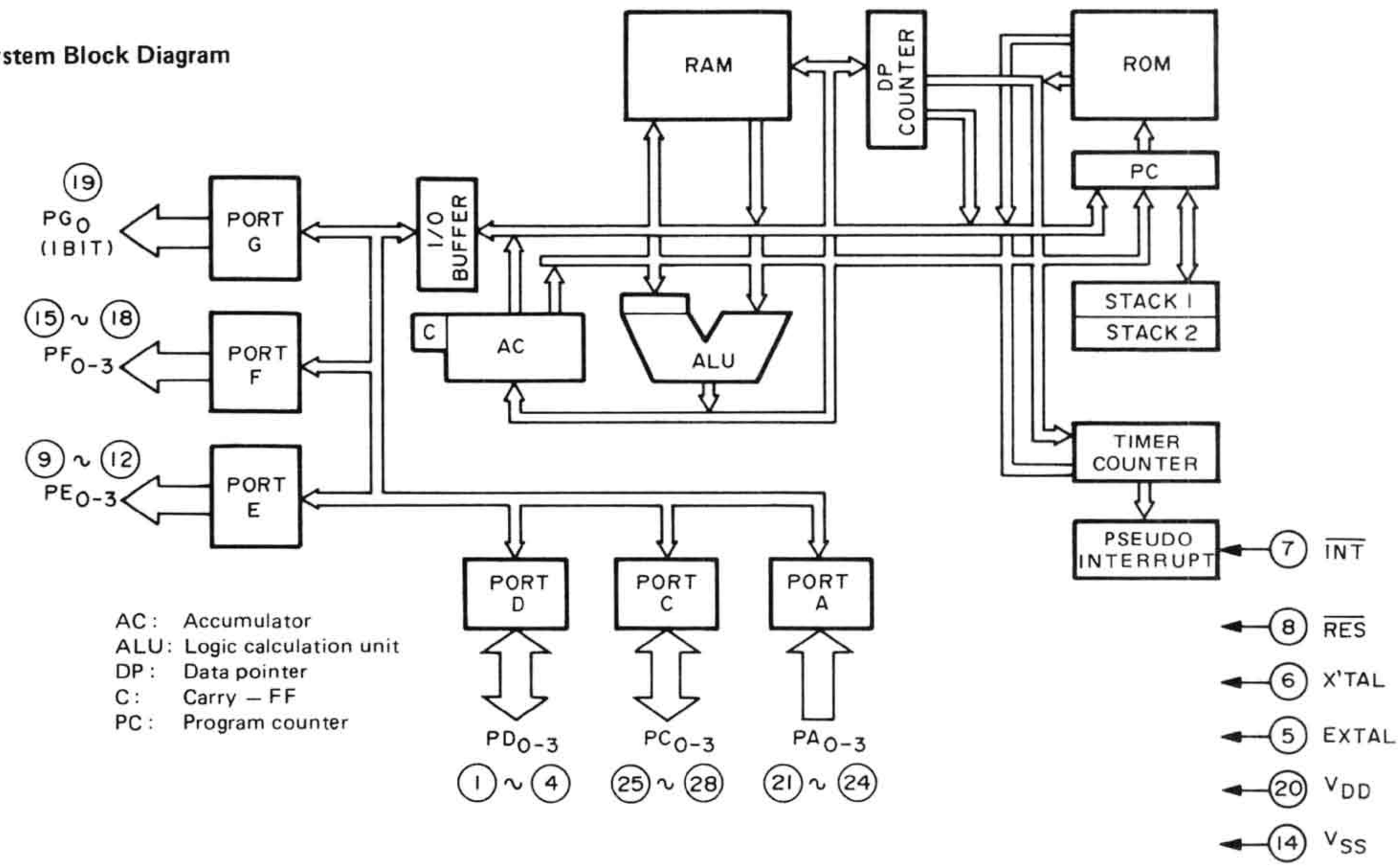


## Package and Pin Names

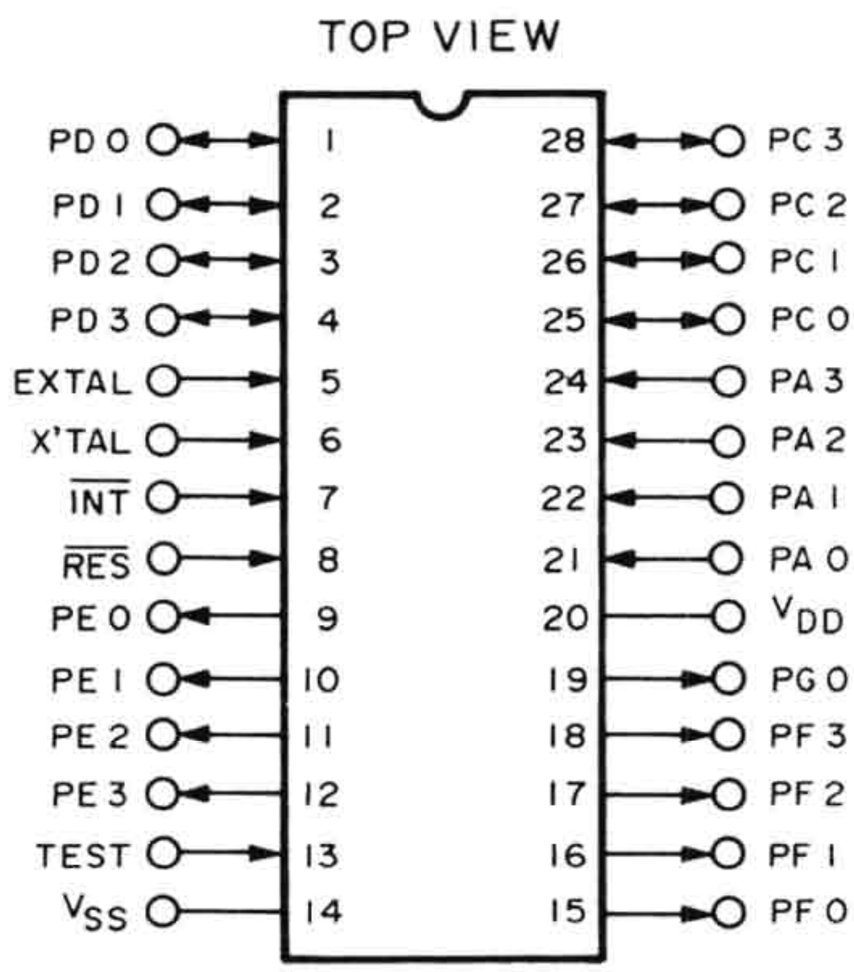


### Pin Names

| | | |
|---|---|---|
| Xtal, EXtal : | Radiator for oscillator | |
| $\overline{INT}$ : | Interrupt | |
| $\overline{RES}$ : | Reset | |
| $PA_{0-3}$ : | Input port | $A_{0-3}$ |
| $PC_{0-3}$ : | Input/output port | $C_{0-3}$ |
| $PD_{0-3}$ : | Input/output port | $D_{0-3}$ |
| $PE_{0-3}$ : | Output port | $E_{0-3}$ |
| $PF_{0-3}$ : | Output port | $F_{0-3}$ |
| $PG_0$ : | Output port | $G_0$ |
| TEST : | Test | |

**Pin Functions**

| Pin Name | Input/Output | Function |
|---|---|---|
| $\overline{INT}$ : | Input : | Pseudo interrupt request input. |
| $\overline{RES}$ : | Input : | Reset input. |
| $PA_{0-3}$ | Input : | Input port $A_0$ to $A_3$; 4-bit input and bit test. |
| $PC_{0-3}$ | Input/output : | Input/output port $C_0$ to $C_3$; 4-bit input and bit test during input; 4-bit output and bit setting and resetting during output, and immediate data output. |
| $PD_{0-3}$ | Input/output : | Input/output port $D_0$ to $D_3$; 4-bit input and bit test during input; 4-bit output and bit setting and resetting during output, and immediate data output. |
| $PE_{0-3}$ | Output : | Output port $E_0$ to $E_3$; 4-bit output and bit, setting and resetting. |
| $PF_{0-3}$ | Output : | Output port $F_0$ to $F_3$; 4-bit output and bit, setting and resetting. |
| $PG_0$ | Output : | Output port $G_0$; 1-bit output and bit setting and resetting. |
| Xtal : | Input/output : | Internal clock generator resonance circuit connetion; Use this pin and EXtal for connection of a ceramic radiator, CR, etc. |
| EXtal : | Input : | Operated by a clock supplied externally, or when using internal clock oscillator, used along with Xtal for connection of a ceramic radiator, CR, etc. (for ceramic or CR oscillation, switched by optional mask). |
| VDD : | Input : | Power supply, usually connected to +5 V |
| VSS : | | Connected to power supply GND. |
| TEST : | Input : | LSI test, usually connected to VSS (GND) |

# 7. BLOCK DIAGRAM

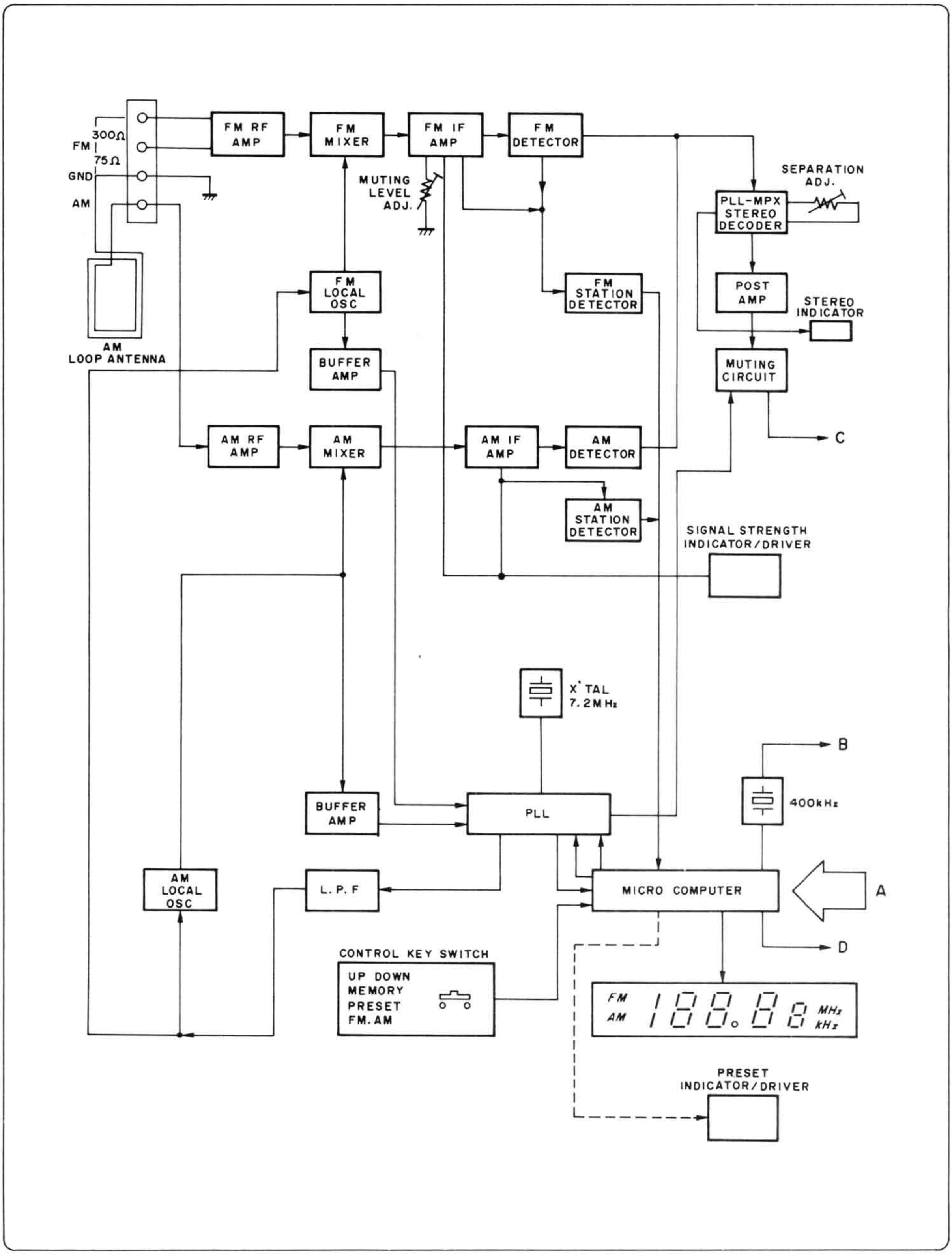

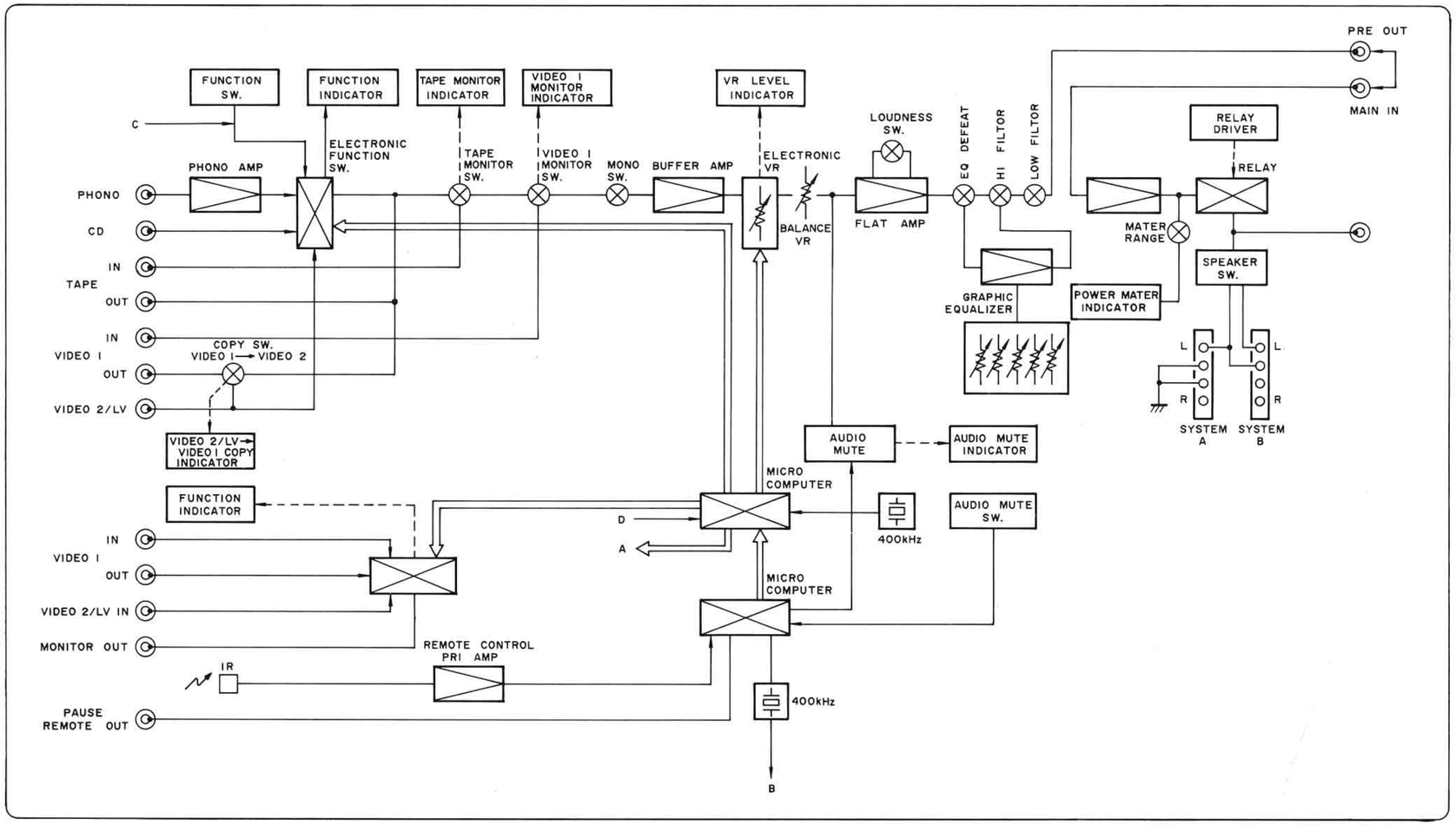


## 8. COMPONENT LOCATIONS

### 8.1 Tuner Preset Assembly (PC04) Component Locations

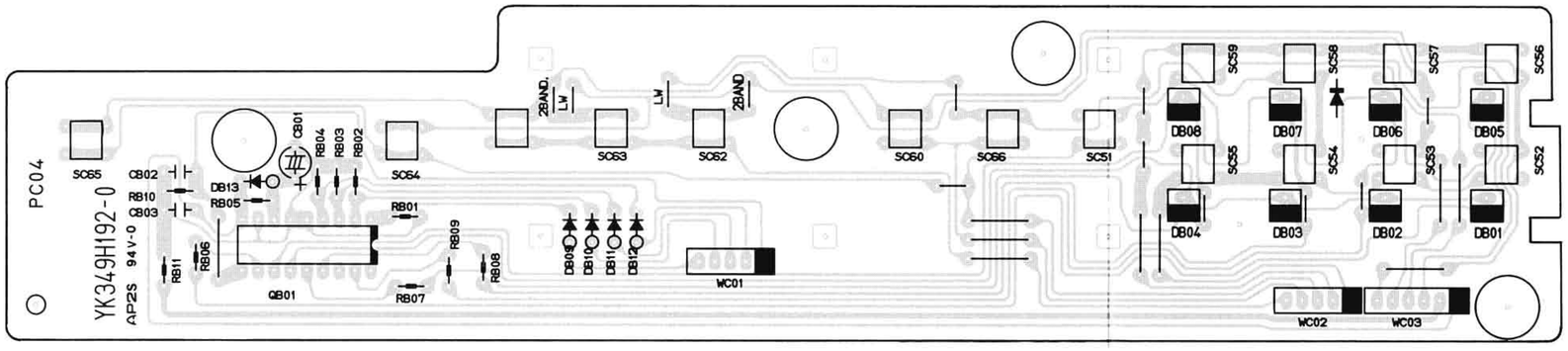


### 8.2 Power Meter, Function Indicator Assembly (PX54) Component Locations

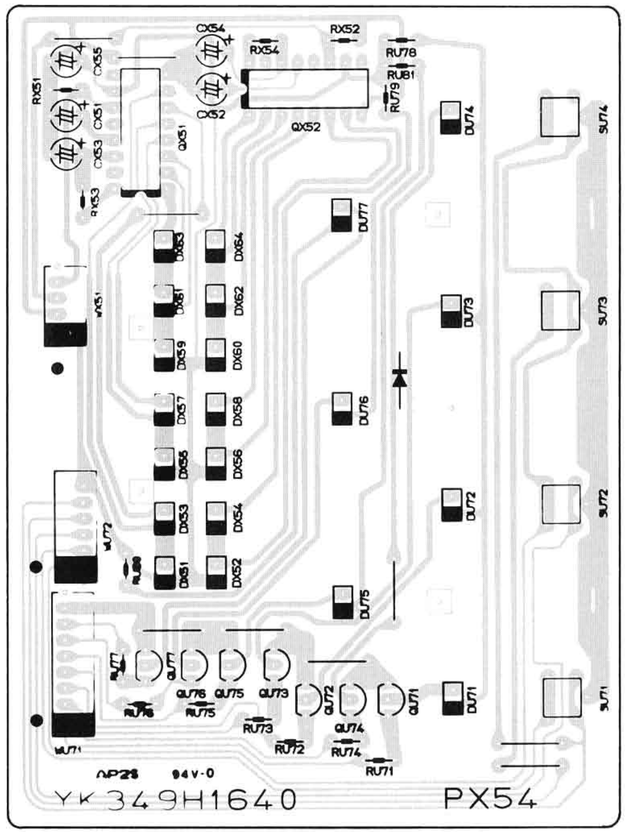


### 8.3 Volume Indicator Assembly (PG84) Component Locations

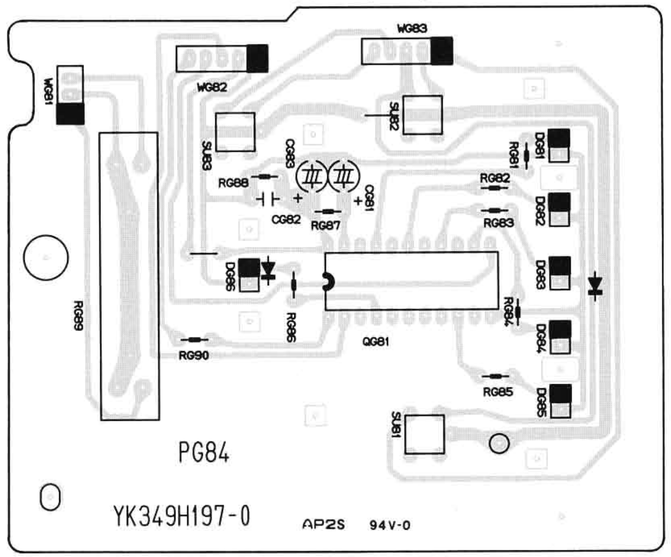

## 8.4 Main Amp/Power Supply Assembly (P704) Component Locations

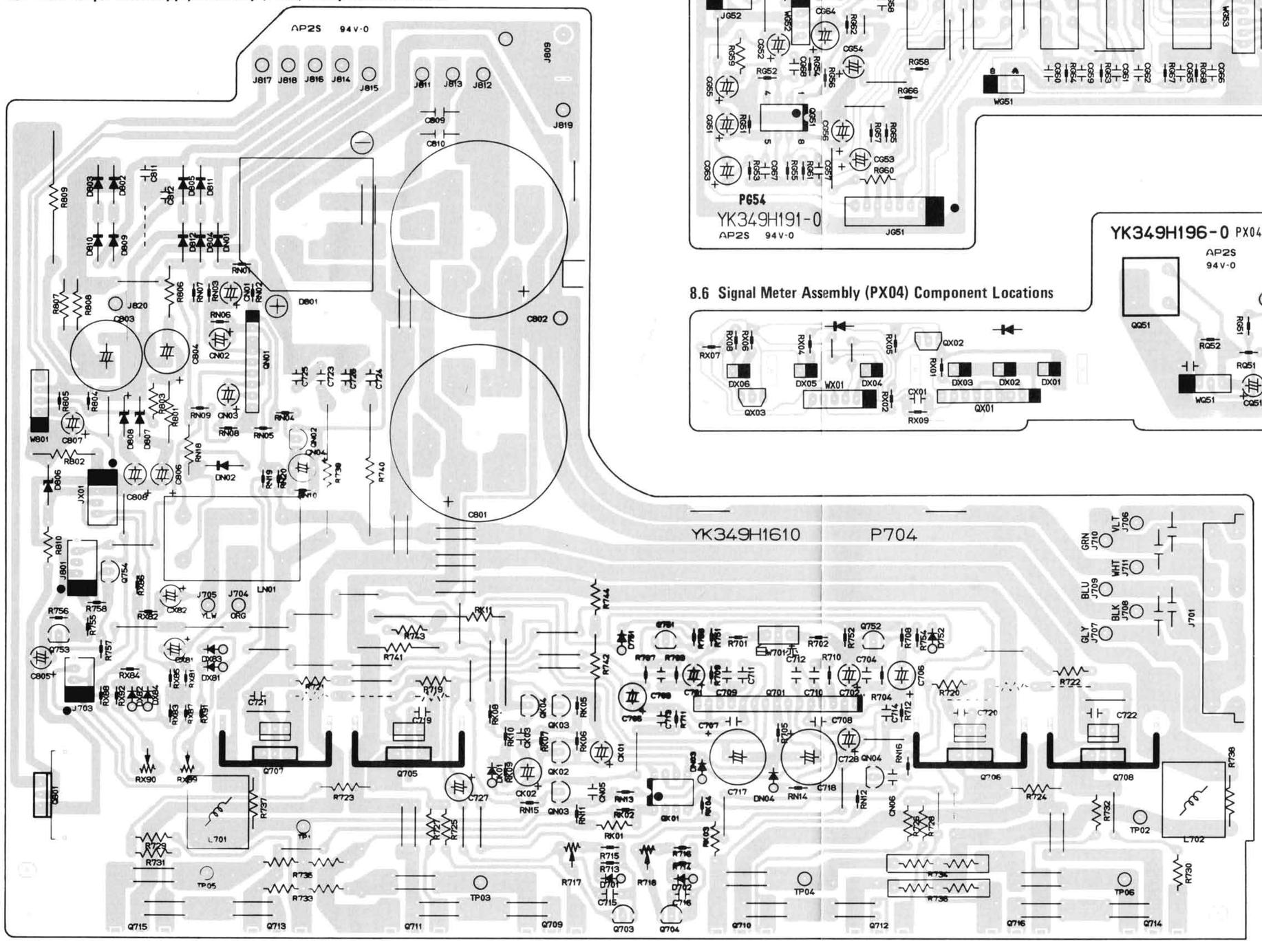


## 8.5 Loudness. Monitor Switch Assembly (PG54) Component Locations

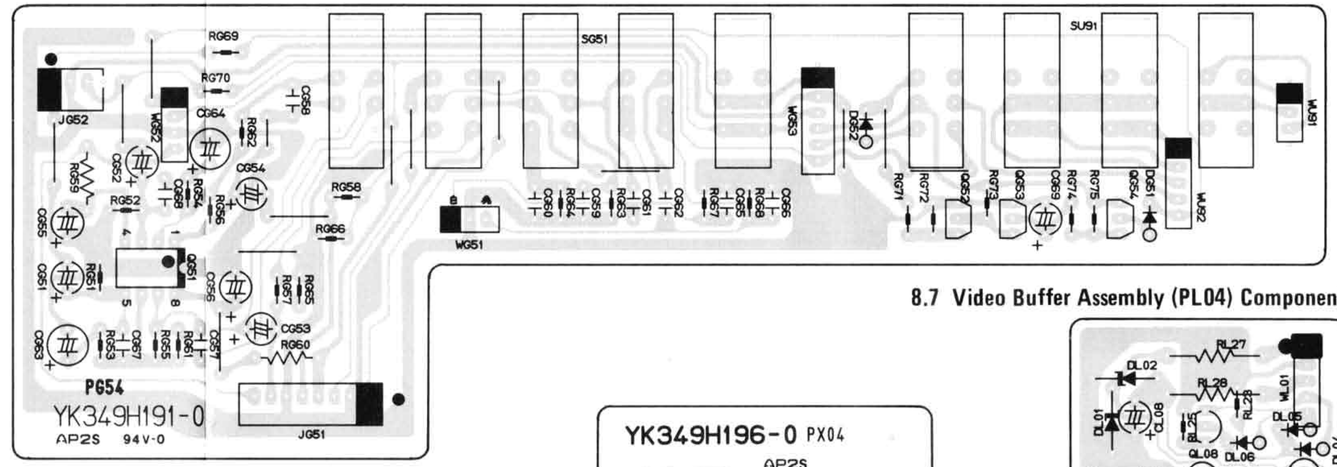


## 8.6 Signal Meter Assembly (PX04) Component Locations

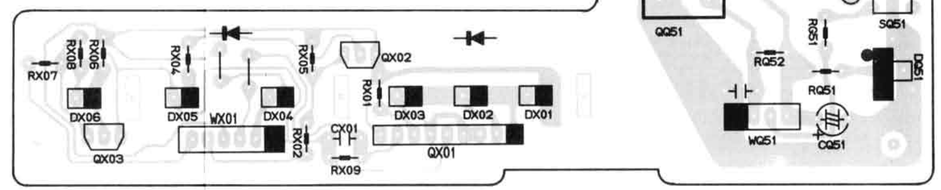


## 8.7 Video Buffer Assembly (PL04) Component Locations

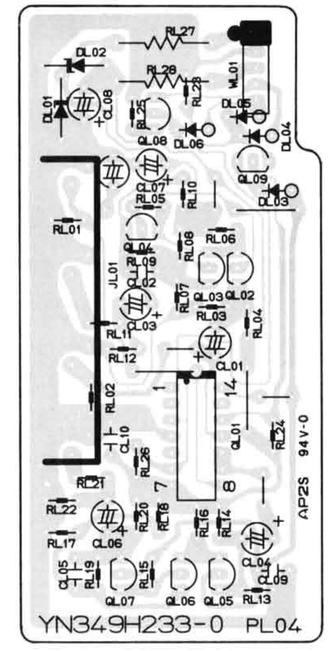


## 8.8 Speaker Switch, Headphone Jack Assembly (PT04) Component Locations

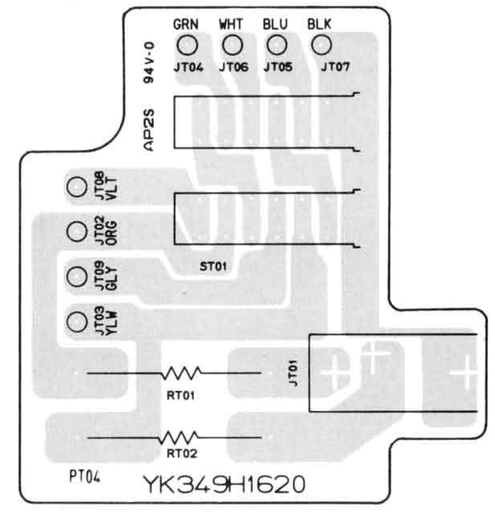

## 8.9 Power Switch Assembly (PP04) Component Locations

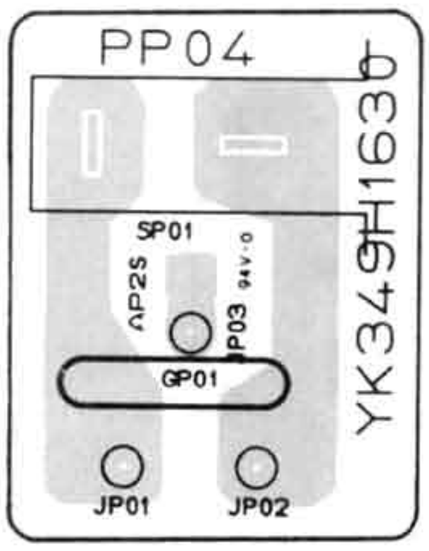


## 8.10 CD Remocon Output Assembly (PQ74) Component Locations

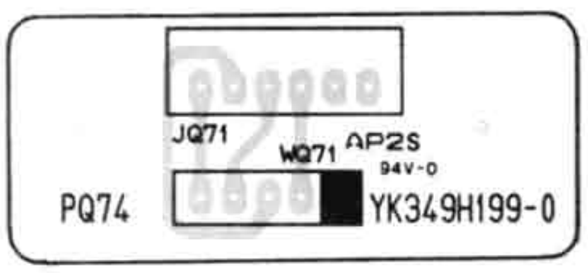


## 8.11 Remot Pause Out Assembly (PW04) Component Locations

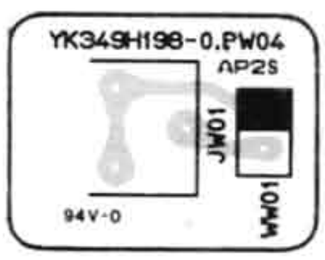


## 8.12 VCR, LV Assembly (PS14) Component Locations

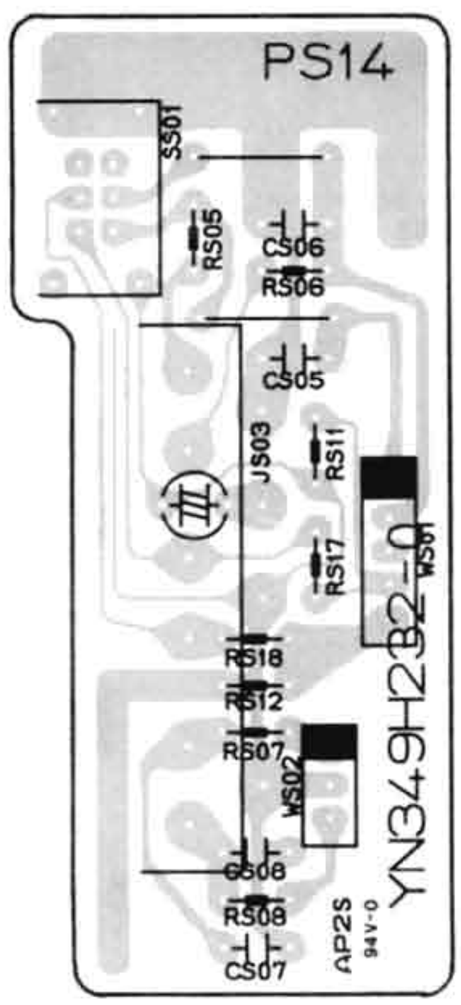


## 8.13 Tuner Assembly (P104) Component Locations

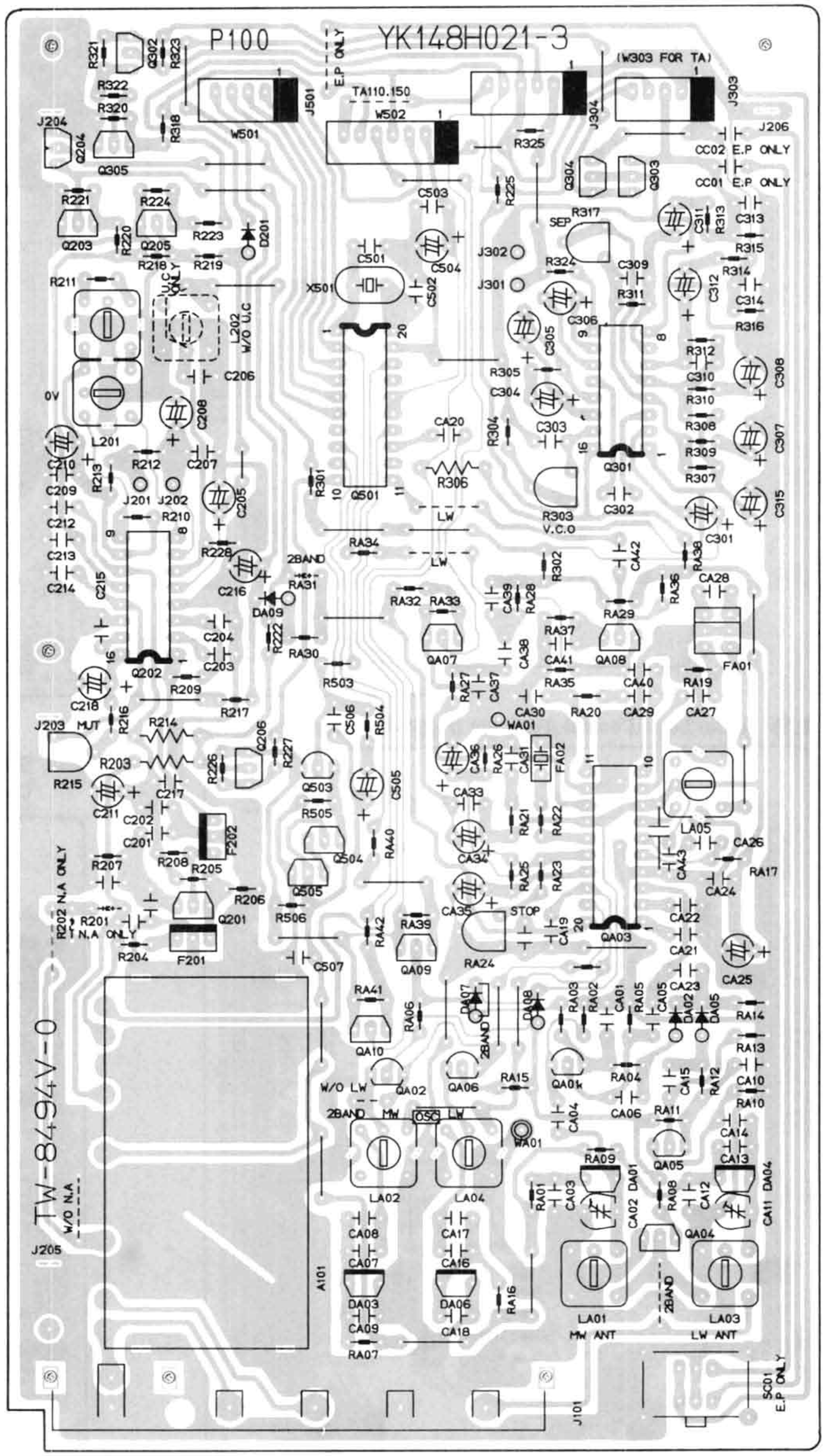

## 8.14 Tuner Logic Control Assembly (PR04) Component Locations

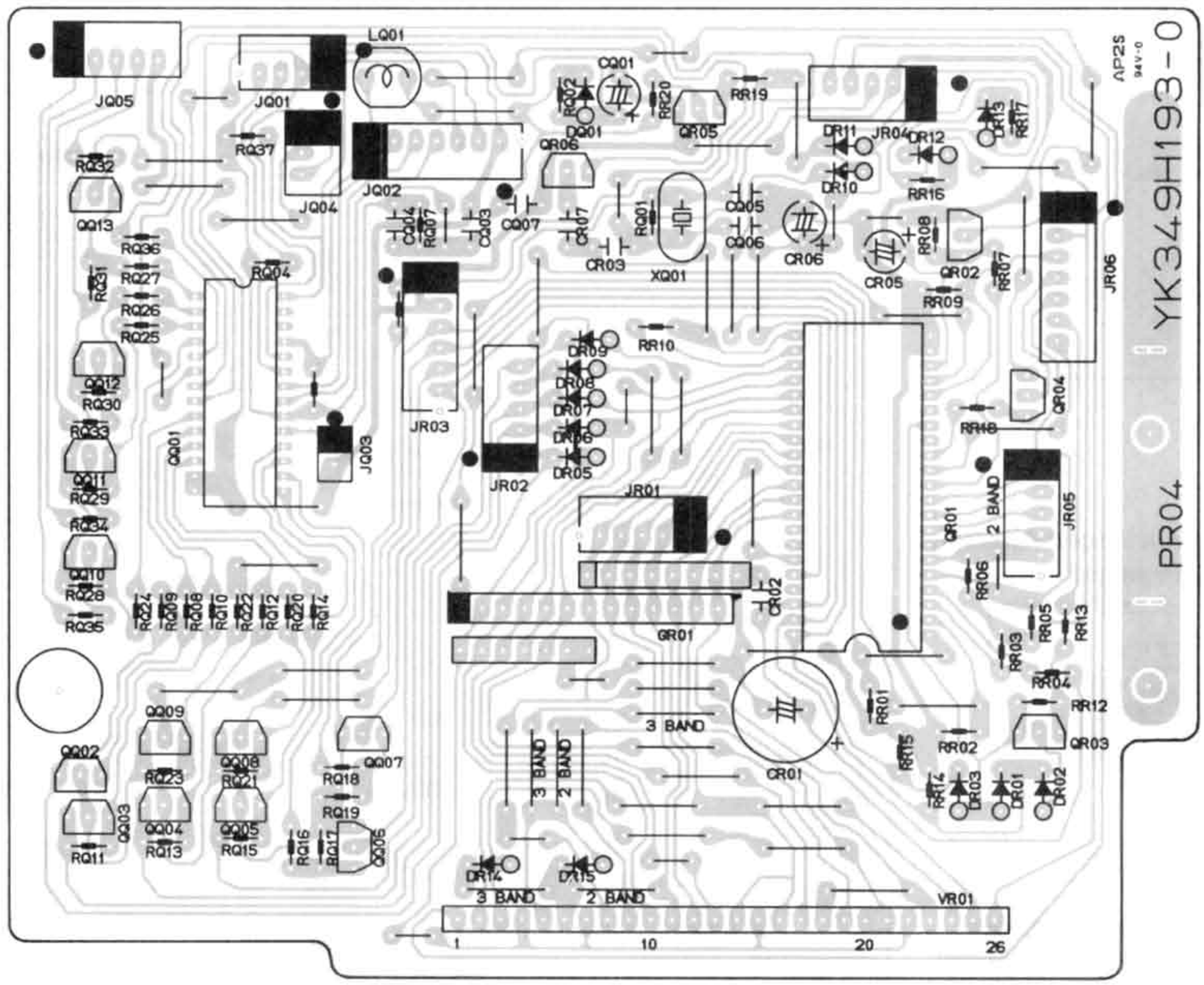


## 8.15 Audio Logic Control Assembly (PU54) Component Locations

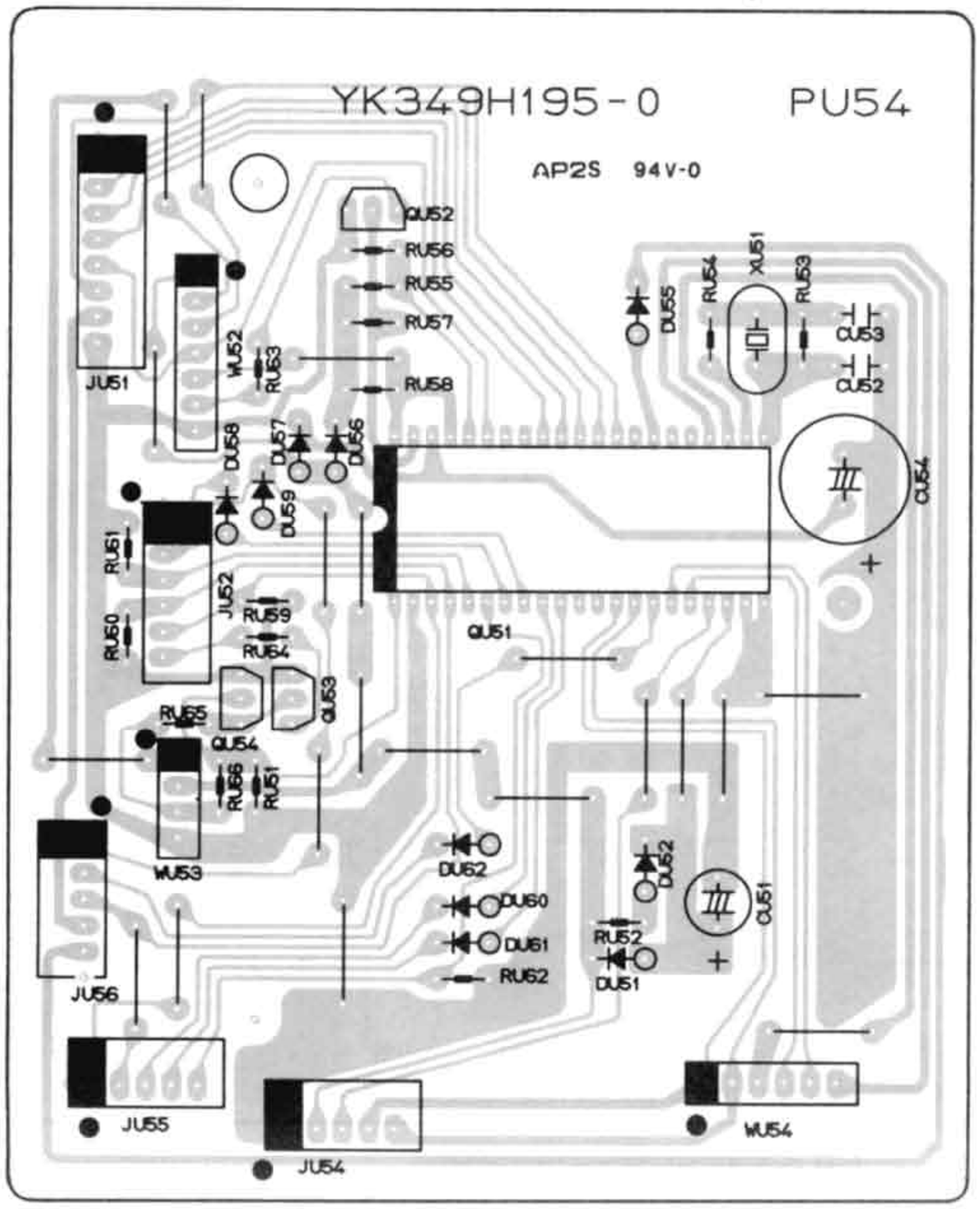


## 8.16 Back Up Power Supply Assembly (P854) Component Locations

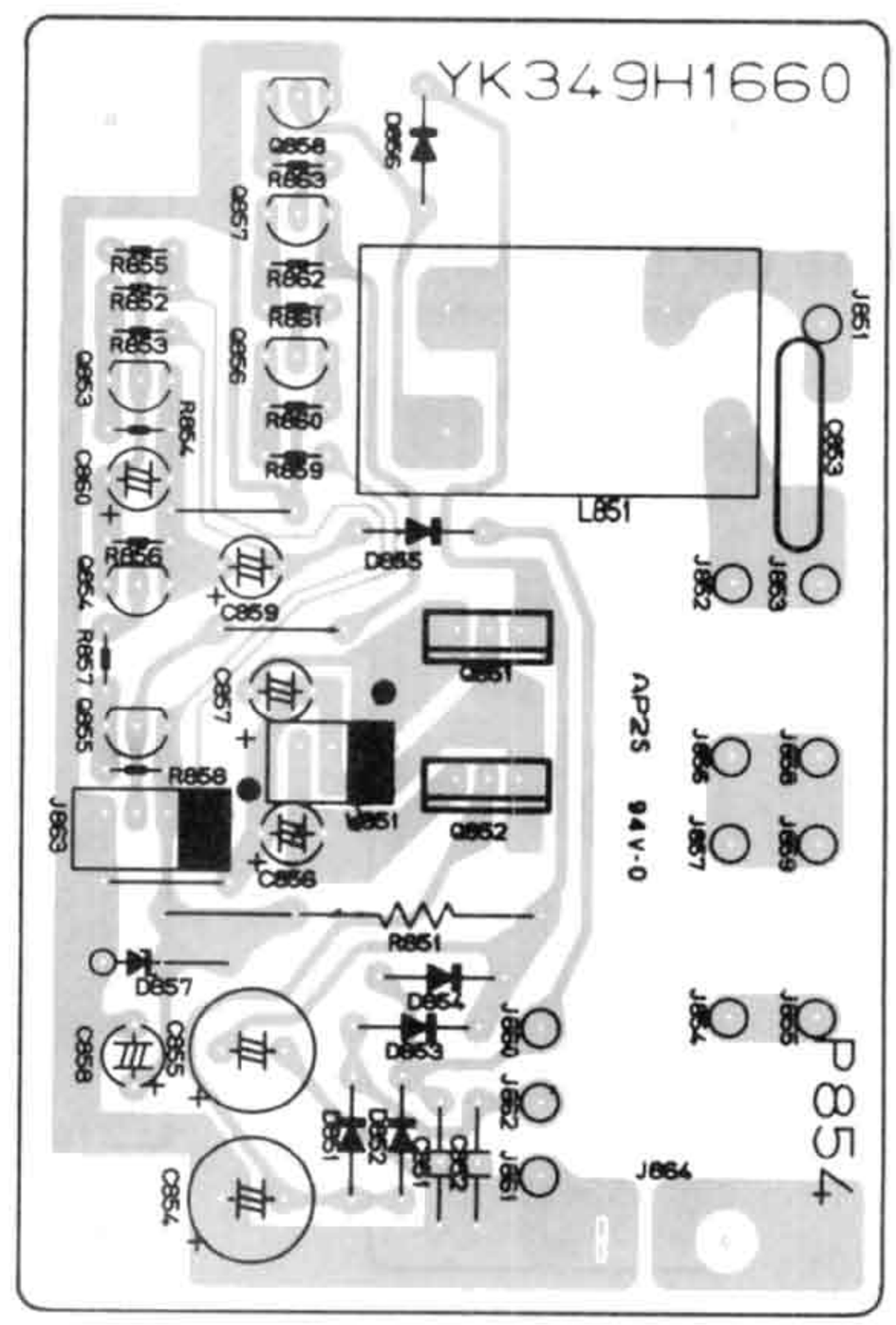

## 8.17 G. Equalizer Assembly (PE04) Component Locations

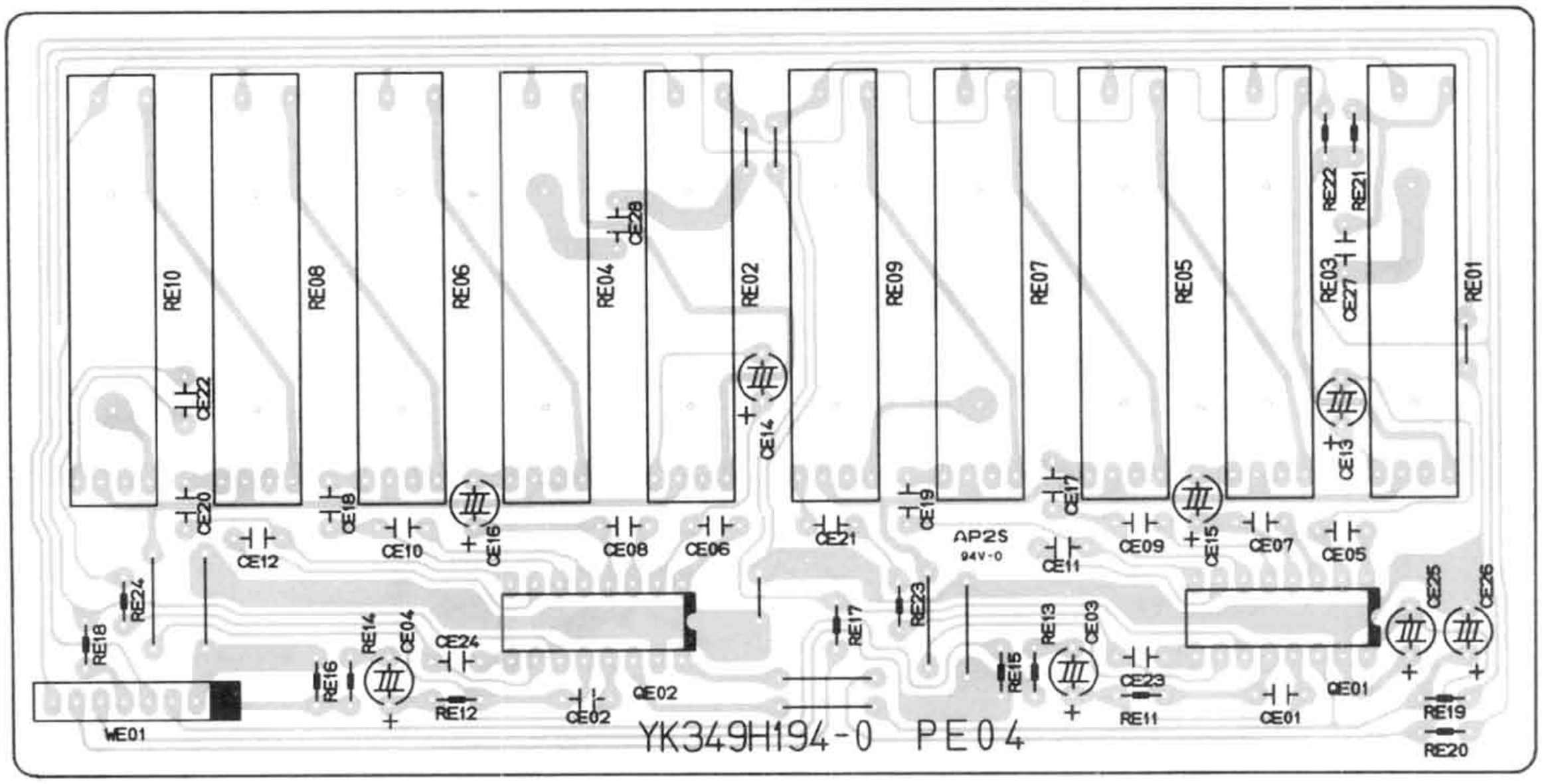


## 8.18 Pre Out/Main in Assembly (PW54) Component Locations

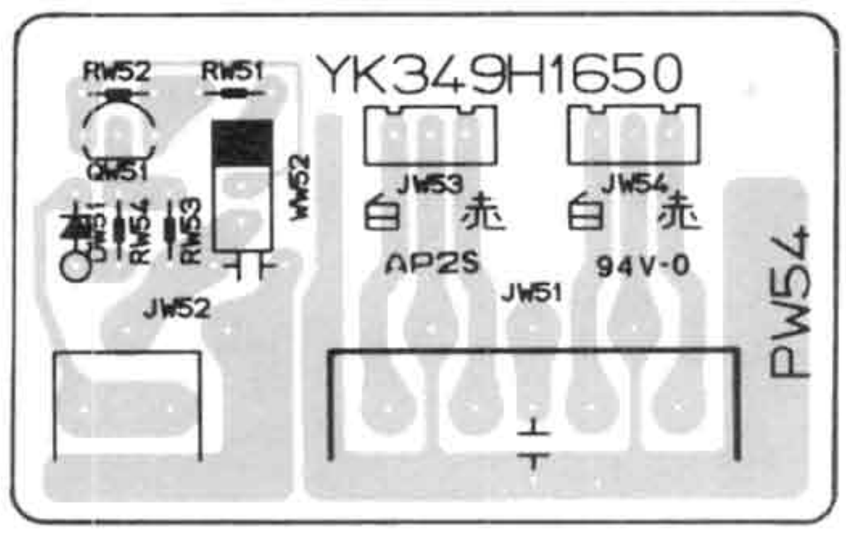


## 8.19 RCA Pin, Phone Function, Elect Volume Assembly (PS04) Component Locations

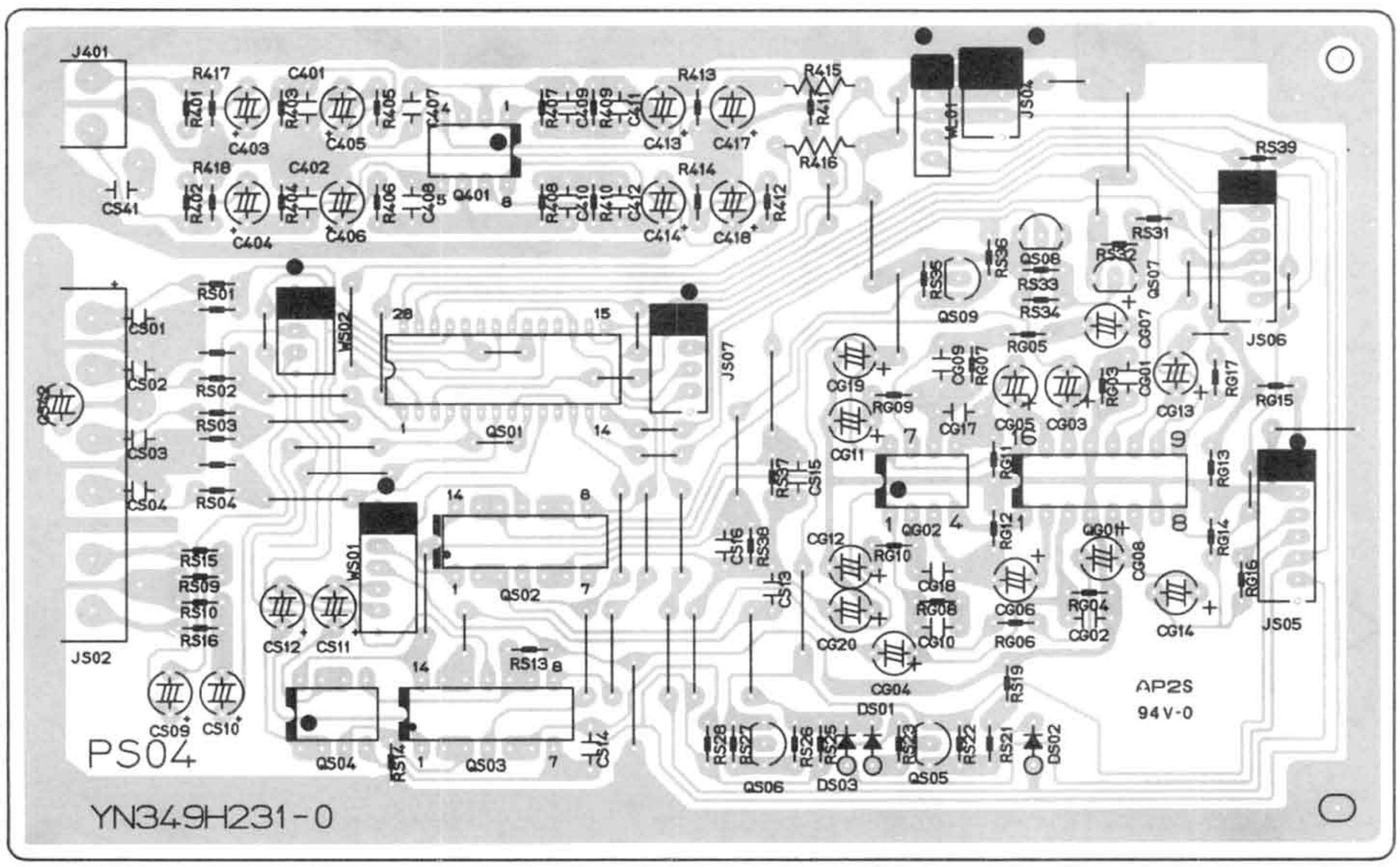

# 9. EXPLODED VIEW AND PARTS LIST

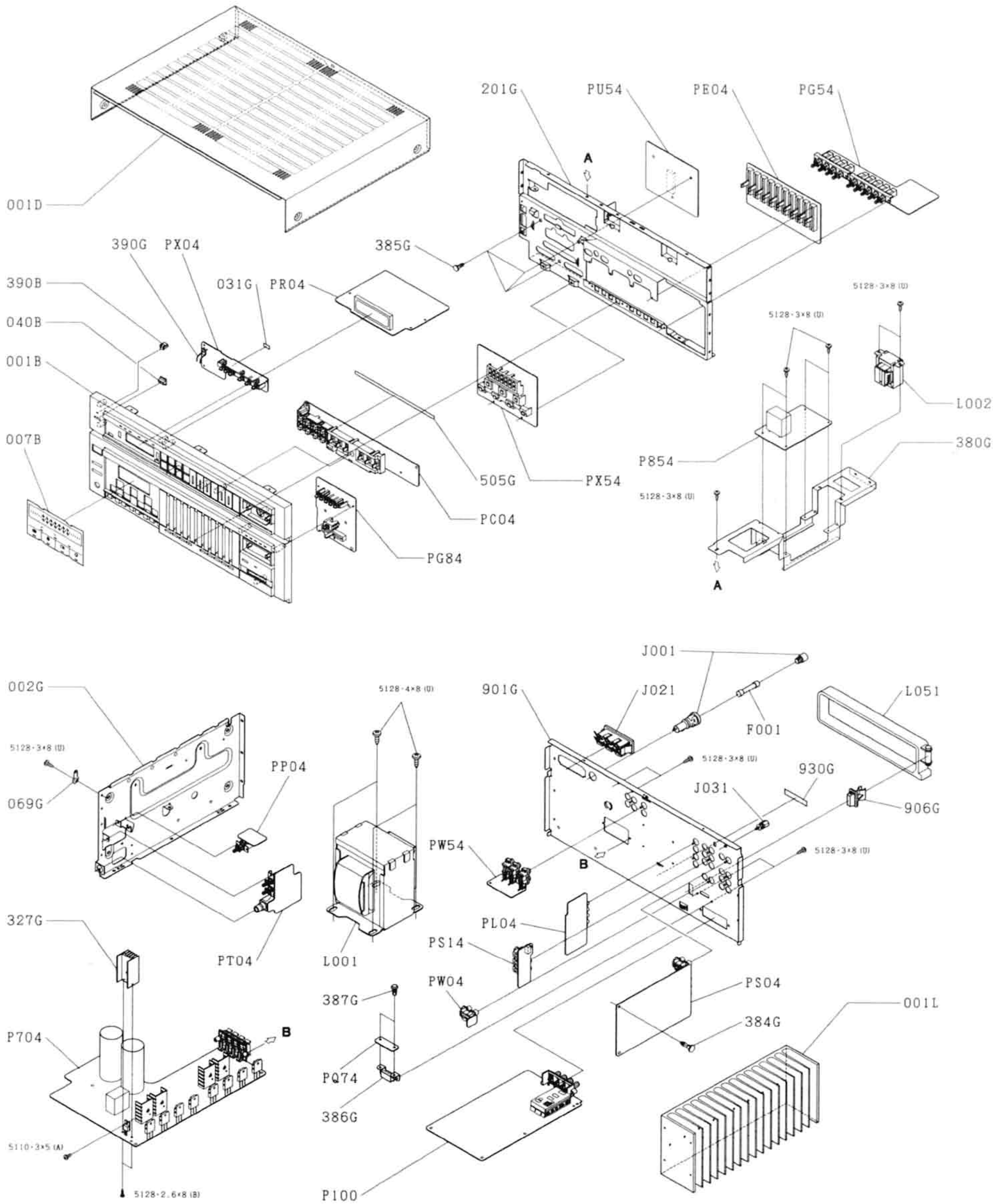

## Different Parts between MODEL TA110/TA150 and TA135AV/TA170AV.

| REF. DESIG. | TA110/TA150 | TA135AV/170AV | DESCRIPTION |
|---|---|---|---|
| | | | **PAGE 18** |
| 001B | 158H248110 | 349H248010 | Front Panel, Black [TA170AV] |
| | 158H248010 | 349H248110 | Front Panel, Gold [TA170AV] |
| | 157H248110 | 350H248010 | Front Panel, Black [TA135AV] |
| | 157H248010 | 350H248110 | Front Panel, Gold [TA135AV] |
| 007B | 158H265120 | 349H265120 | Indicator, Gold [TA170AV] |
| | 158H265020 | 349H265020 | Indicator, Black [TA170AV] |
| | 157H265120 | 350H265120 | Indicator, Gold [TA135AV] |
| | 157H265020 | 350H265020 | Indicator, Black [TA135AV] |
| 037B | 452H118010 | | |
| 040B | | 132T154310 | Knob, Black, Power Standby |
| | | 132T154010 | Knob, Gold, Power Standby |
| 390B | | 178H355010 | Lens, Power Standby |
| 031G | | 157T118010 | Spacer |
| 090G | 158H109010 | | |
| 380G | | 350H160010 | Bracket |
| 385G | | 467H118010 | Spacer |
| 390G | | 350H118010 | Spacer |
| 505G | | 157H120010 | Insulator |
| ⚠L002 | | TS14132350 | Power Transformer, Back UP |
| | | | **PAGE 19** |
| 001D | | 157H257120 | Lid, Top Cover, Black |
| | | 157H257020 | Lid, Top Cover, Gold |
| 001S | 158H801010 | 349H801010 | Packing Case [TA170AV] |
| | 157H801010 | 350H801010 | Packing Case [TA135AV] |
| 011S | | 157H107010 | Sheet, Front Panel |
| 001T | 158H851210 | 349H851210 | User Manual |
| 002T | 158H851220 | | |
| | 157H851210 | | |
| 002T | | 103H854010 | Warranty Card |
| 003T | 103H854010 | | |
| 003T | | 180T854010 | Warranty Card |
| 004T | 180T854010 | | |
| Z001 | ZK157H0010 | ZK349H0010 | Remocon Unit K, Black |
| | | ZK349H0020 | Remocon Unit K, Gold |
| Z004 | | ZD01000250 | Connective Cord |
| | | | **PAGE 20** |
| 901G | 158H250010 | 349H250010 | Rear Panel [TA170AV] |
| | 157H250010 | 350H250010 | Rear Panel [TA135AV] |
| ⚠F001 | FS10800500 | FS10700500 | Fuse, 7A 250V [TA170AV] |
| | FS10700500 | FS10600500 | Fuse, 6A 250V [TA135AV] |
| ⚠J001 | YJ08000300 | YJ08000410 | Jack, Fuse Holder |
| ⚠J021 | YJ04001210 | YJ04001180 | Jack, AC Outlet |
| J031 | YL03010250 | YL03010280 | Terminal, GND |
| L051 | LA00015020 | LA00035010 | Antenna Coil, Loop |
| 384G | | 045H118010 | Spacer |
| 386G | | 350H104010 | Retainer |
| 387G | | 2276005050 | Clamper |
| | | | **PAGE 21** |
| 311G | 157H160020 | 263H160020 | Bracket, Heatsink Rear |
| 001L | 158H267010 | 349H267010 | Heatsink, Main [TA170AV] |
| | 157H267010 | 350H267010 | Heatsink, Main [TA135AV] |
| ⚠L001 | TS61410020 | TS61420010 | Power Transformer [TA170AV] |
| | TS19624050 | TS19628040 | Power Transformer [TA135AV] |

## ASSIGNMENT OF COMMON PARTS CODES.

RESISTOR

R***: (1) GD05 --- 140, Carbon film fixed resistor, ±5%, 1/4W
R***: (2) GD05 --- 160, Carbon film fixed resistor, ±5%, 1/6W

① — Resistance value

Examples

① Resistance value

| | | | |
|---|---|---|---|
| 0.1Ω...001 | 10Ω...100 | 1kΩ...102 | 100kΩ...104 |
| 0.5Ω...005 | 18Ω...180 | 2.7kΩ...272 | 680kΩ...684 |
| 1Ω...010 | 100Ω...101 | 10kΩ...103 | 1MkΩ...105 |
| 6.8Ω...068 | 390Ω...391 | 22kΩ...223 | 4.7MkΩ...475 |

(Note) Please distinguish 1/4W from 1/6W by the shape of parts used actually.

C***: CERAMIC CAP.

(1) DD1 ---- 370, Ceramic condenser
Disc type
Temp. coeff. P350 ~ N1000, 50V

①② — Capacity value
① — Tolerance

Examples

① Tolerance (Capacity deviation)

±0.25pF...0
±0.5pF...1
±5%...5

* Tolerance of COMMON PARTS handled here are as follows:

0.5pF ~ 5pF...±0.25pF
6pF ~ 10pF...±0.5pF
12pF ~ 560pF...±5%

② Capacity value

| | | |
|---|---|---|
| 0.5pF...005 | 3pF...030 | 100pF...101 |
| 1pF...010 | 10pF...100 | 220pF...221 |
| 1.5pF...015 | 47pF...470 | 560pF...561 |

C***: CERAMIC CAP.

(1) DK16 --- 300, High dielectric constant ceramic condenser
Disc type
Temp. chara. 2B4, 50V

① — Capacity value

Example

② Capacity value

| | | |
|---|---|---|
| 100pF...101 | 1000pF...102 | 10000pF...103 |
| 470pF...471 | 2200pF...222 | |

C***: ELECTROLY CAP. ( ⧺ ), FILM CAP. ( ⧺ )

(1) EA ------ 10, Electrolytic condenser
One-way lead type, Tolerance ±20%

①② — Dielectric strength
① — Capacity value

Examples

① Capacity value

| | | |
|---|---|---|
| 0.1μF...104 | 4.7μF...475 | 100μF...107 |
| 0.33μF...334 | 10μF...106 | 330μF...337 |
| 1μF...105 | 22μF...226 | 1100μF...108 |
| | | 2200μF...228 |

② Working voltage

| | |
|---|---|
| 6.3V...006 | 25V...025 |
| 10V...010 | 35V...035 |
| 16V...016 | 50V...050 |

(2) DF15 --- 350, Plastic film condenser
One-way type, Mylar ±5% 50V

① — Capacity value

Examples

① Capacity value

| | |
|---|---|
| 0.001μF (1000pF)...102 | 0.1μF...104 |
| 0.0018μF.....182 | 0.56μF...564 |
| 0.01μF.....103 | 1μF...105 |
| 0.015μF.....153 | |

# 10. ELECTRICAL PARTS LIST

| REF. DESIG. | PART NO. | DESCRIPTION |
|---|---|---|
| | | **PC04-TUNER PRESET CIRCUIT BOARD** |
| PC04 | YK349H1920 | P.W. Board, Tuner Preset |
| CB03 | DK18103310 | Ceramic Cap. 0.01μF +80% −20% |
| DB01 ~ DB08 | HI10034320 | L.E.D. GL-9EG14 |
| DB09 ~ DB13 | HD20002000 | Diode 1SS133, etc. |
| QB01 | HC10171030 | IC LC7572 |
| SC51 ~ SC60 | SP01011000 | Push Switch |
| SC62 ~ SC66 | SP01011000 | Push Switch |
| WC01 | YU05280260 | Jumper Lead, 5P |
| WC02 | YU05220260 | Jumper Lead, 5P |
| WC03 | YU06200260 | Jumper Lead, 6P |
| | | **PE04-GRAPHIC EQ. CIRCUIT BOARD** |
| PE04 | YK349H1940 | P.W. Board, Graphic EQ. |
| | | **PE04-CAPACITORS** |
| CE27 | DK18223310 | Ceramic 0.022μF +80% −20% |
| CE28 | DK18223310 | Ceramic 0.022μF +80% −20% |
| | | **PE04-RESISTORS** |
| RE01 ~ RE10 | RX01040110 | 100KΩ(W), Variable |
| | | **PE04-SEMICONDUCTORS** |
| QE01 | HC10036200 | IC M5222P |
| QE02 | HC10036200 | IC M5222P |
| | | **PE04-MISCELLANOUS** |
| WE01 | YU08160260 | Jumper Lead, 8P |
| | | **PG54-LOUD/MONI/MODE SW. CIRCUIT BOARD** |
| PG54 | YK349H1910 | P.W. Board, Loud/Moni/Mode SW. |
| RG59 | GG05181140 | Resistor 180Ω ±5% ¼W |
| RG60 | GG05181140 | Resistor 180Ω ±5% ¼W |
| DG51 | HD20002000 | Diode 1SS133, etc. |
| DG52 | HD20002000 | Diode 1SS133, etc. |
| QG51 | HC10008090 | IC NJM4558D-D |
| QG52 | HT30001000 | Transistor 2SC536SP, etc. |
| QG53 | HT30001000 | Transistor 2SC536SP, etc. |
| QG54 | HT10001000 | Transistor 2SA608SP, etc. |

| REF. DESIG. | PART NO. | DESCRIPTION |
|---|---|---|
| JG51 | YJ06002270 | Jack, 8P |
| JG52 | YJ06002430 | Jack, 3P |
| SG51 | SP02050160 | Push Switch |
| SU91 | SP02040400 | Push Switch |
| WG51 | YB00560060 | Connective Cord |
| WG52 | YU04300260 | Jumper Lead, 4P |
| WG53 | YU06300260 | Jumper Lead, 6P |
| WU91 | YU03140260 | Jumper Lead, 3P |
| WU92 | YU05200260 | Jumper Lead, 5P |
| | | **PG84-VOL IND. UP/DOWN & MUTE SW. CIRCUIT BOARD** |
| PG84 | YK349H1970 | P.W. Board, Vol Ind. Up/Down & Mute SW. |
| CG82 | DK18223310 | Ceramic Cap. 0.022μF +80% −20% |
| RG89 | RX05030260 | Variable Resistor, 50KΩ(W) |
| DG81 | HI10051030 | L.E.D. SLP251B-60 |
| DG82 | HI10051030 | L.E.D. SLP251B-60 |
| DG83 | HI10051030 | L.E.D. SLP251B-60 |
| DG84 | HI10051030 | L.E.D. SLP251B-60 |
| DG85 | HI10050030 | L.E.D. SLP151B-60 |
| DG86 | HI10050030 | L.E.D. SLP151B-60 |
| QG81 | HC10001260 | IC MSM59371RS |
| SU81 | SP01011000 | Push Switch, UP |
| SU82 | SP01011000 | Push Switch, Down |
| SU83 | SP01010970 | Push Switch, Mute |
| WG81 | YU03120260 | Jumper Lead, 3P |
| WG82 | YU05240260 | Jumper Lead, 5P |
| WG83 | YU05240260 | Jumper Lead, 5P |
| | | **PL04-VIDEO BUFFER CIRCUIT BOARD** |
| PL04 | YN349H2330 | P.W. Board, Video Buffer |
| | | **PL04-CAPACITORS** |
| CL09 | DK18223310 | Ceramic 0.022μF +80% −20% |
| CL10 | DK18223310 | Ceramic 0.022μF +80% −20% |
| | | **PL04-RESISTORS** |
| RL27 | GA05221010 | 220Ω ±5% 1W |
| RL28 | GA05221010 | 220Ω ±5% 1W |
| | | **PL04-SEMICONDUCTORS** |
| DL01 | HD30004020 | Zener MA1051M |
| DL02 | HD30004020 | Zener MA1051M |
| DL03 | HD20002000 | Diode 1SS133, etc. |
| DL04 | HD20002000 | Diode 1SS133, etc. |
| DL05 | HD20002000 | Diode 1SS133, etc. |
| DL06 | HD20002000 | Diode 1SS133, etc. |
| QL01 | HC406603C0 | IC LC4066B-H |
| QL02 ~ QL07 | HT30001000 | Transistor 2SC536SP(F, G), etc. |
| QL08 | HT10001000 | Transistor 2SA608SP(F, G), etc. |
| QL09 | HT10001000 | Transistor 2SA608SP(F, G), etc. |

| REF. DESIG. | PART NO. | DESCRIPTION |
|---|---|---|
| | | **PL04-MISCELLANEOUS** |
| JL01 | YT02040700 | Terminal, RCA |
| WL01 | YU05200260 | Jumper Lead, 5P |
| | | **PP04-POWER SWITCH CIRCUIT BOARD** |
| PP04 | YK349H1630 | P.W. Board, Power Switch |
| ⚠GP01 | DK18103840 | Ceramic Cap. 0.01μF 400V |
| ⚠SP01 | SP01010830 | Push Switch, Power |
| | | **PQ74-CD REMOCON OUTPUT CIRCUIT BOARD** |
| PQ74 | YK349H1990 | P.W. Board, CD Remocon Output |
| JQ71 | YP06004450 | Plug |
| WQ71 | YU05720260 | Jumper Lead, 5P |
| | | **PR04-TUNER LOGIC CONTROL CIRCUIT BOARD** |
| PR04 | YK349H1930 | P.W. Board, Tuner Logic Control |
| | | **PR04-CAPACITORS** |
| CQ03 | DK18103310 | Ceramic 0.01μF +80% −20% |
| CQ04 | DK18103310 | Ceramic 0.01μF +80% −20% |
| CR02 | DK18103310 | Ceramic 0.01μF +80% −20% |
| CR07 | DK18103310 | Ceramic 0.01μF +80% −20% |
| | | **PR04-RESISTOR** |
| GR01 | BW05104020 | 100KΩx12 ±5% 1/8W, Composite |
| | | **PR04-SEMICONDUCTORS** |
| DQ01 | HD20002000 | Diode 1SS133, etc. |
| DR03 | HD20002000 | Diode 1SS133, etc. |
| DR05 ~ DR13 | HD20002000 | Diode 1SS133, etc. |
| QQ01 | HU10006030 | Microprocessor LM6413E |
| QQ02 ~ QQ13 | HT10001000 | Transistor 2SA608SP(F, G), etc. |
| QR01 | HC10163030 | IC LC6502D-726 |
| QR02 | HT30001000 | Transistor 2SC536SP(F, G), etc. |
| QR04 | HT30001000 | Transistor 2SC536SP(F, G), etc. |
| QR05 | HT30001000 | Transistor 2SC536SP(F, G), etc. |
| QR06 | HT30001000 | Transistor 2SC536SP(F, G), etc. |
| | | **PR04-MISCELLANEOUS** |
| JQ01 | YJ06002440 | Jack, 4P |
| JQ02 | YJ06002460 | Jack, 7P |
| JQ03 | YJ07001520 | Jack, 2P |
| JQ04 | YJ06002430 | Jack, 3P |
| JQ05 | YJ06002390 | Jack, 5P |
| JR01 | YJ06002390 | Jack, 5P |
| JR02 | YJ06002390 | Jack, 5P |
| JR03 | YJ06002450 | Jack, 6P |
| JR04 | YJ06002390 | Jack, 5P |
| JR05 | YJ06002390 | Jack, 5P |
| JR06 | YJ06002460 | Jack, 7P |
| VR01 | HQ30705060 | Display Unit, FIP7P8C |
| XR01 | FQ04003010 | Seramic Vibrator, CSB400P |

| REF. DESIG. | PART NO. | DESCRIPTION |
|---|---|---|
| | | **PS04-PHO/FUNC/EL VOL CIRCUIT BOARD** |
| PS04 | YN349H2310 | P.W. Board, Pho/Func/EL Vol |
| | | **PS04-CAPACITORS** |
| CS13 | DK18473310 | Ceramic 0.047μF +80% −20% |
| CS14 | DK18473310 | Ceramic 0.047μF +80% −20% |
| CS15 | DK18473310 | Ceramic 0.047μF +80% −20% |
| CS16 | DK18473310 | Ceramic 0.047μF +80% −20% |
| CS43 | DK18223310 | Ceramic 0.022μF +80% −20% |
| | | **PS04-RESISTORS** |
| R415 | GG05181140 | 180Ω ±5% ¼W |
| R416 | GG05181140 | 180Ω ±5% ¼W |
| | | **PS04-SEMICONDUCTORS** |
| DS01 | HD20002000 | Diode 1SS133, etc. |
| DS02 | HD20002000 | Diode 1SS133, etc. |
| DS03 | HD20002000 | Diode 1SS133, etc. |
| QG01 | HC10118050 | IC TC9176P |
| QG02 | HC10008090 | IC NJM4558D-D |
| QS01 | HC10117050 | IC TC9163N |
| QS02 | HC10150030 | IC LC4966 |
| QS03 | HC10150030 | IC LC4966 |
| QS04 | HC10008090 | IC NJM4558D-D |
| QS05 | HT10001000 | Transistor 2SA608SP(F, G), etc. |
| QS06 | HT10001000 | Transistor 2SA608SP(F, G), etc. |
| QS07 | HT30001000 | Transistor 2SC536SP(F, G), etc. |
| QS08 | HT10001000 | Transistor 2SA608SP(F, G), etc. |
| QS09 | HT10001000 | Transistor 2SA608SP(F, G), etc. |
| Q401 | HC10026090 | IC NJM2041D-D |
| | | **PS04-MISCELLANEOUS** |
| JS02 | YT02060240 | Terminal, 6P; RCA |
| JS04 | YJ06002430 | Jack, 3P |
| JS05 | YJ06002450 | Jack, 6P |
| JS06 | YJ06002450 | Jack, 6P |
| JS07 | YJ06002440 | Jack, 4P |
| J401 | YT02020490 | Terminal, 2P; RCA |
| WS01 | YU05160260 | Jumper Lead, 5P |
| WS02 | YU03140260 | Jumper Lead, 3P |
| | | **PS14-VCR/LV CIRCUIT BOARD** |
| PS14 | YN349H2320 | P.W. Board, VCR/LV |
| JS03 | YT02060240 | Terminal, 6P; RCA |
| SS01 | SS02021010 | Slide Switch, MON-ST |
| | | **PT04-SPK SW/HEADPHONE CIRCUIT BOARD** |
| PT04 | YK349H1620 | P.W. Board, SPK SW./Headphone |
| RT01 | NK05331030 | Metal Resistor, 330Ω ±5% 3W |
| RT02 | NK05331030 | Metal Resistor, 330Ω ±5% 3W |
| JT01 | YJ01002080 | Jack, Headphone, Black |
| | YJ01001790 | Jack, Headphone, Gold |
| ST01 | SP04020440 | Push Switch, Speaker |

| REF. DESIG. | PART NO. | DESCRIPTION |
|---|---|---|
| | | **PU54-AUDIO LOGIC CONTROL CIRCUIT BOARD** |
| PU54 | YK349H1950 | P.W. Board, Audio Logic Control |
| | | **PU54-CAPACITOR** |
| CU54 | EJ10801670 | Elect 1000μF 16V |
| | | **PU54-SEMICONDUCTORS** |
| DU51 | HD20002000 | Diode 1SS133, etc. |
| DU52 | HD20002000 | Diode 1SS133, etc. |
| DU55 ~ DU62 | HD20002000 | Diode 1SS133, etc. |
| QU51 | HC10169030 | IC LM6502C |
| QU52 | HT30001000 | Transistor 2SC536SP(F, G), etc. |
| QU53 | HT30001000 | Transistor 2SC536SP(F, G), etc. |
| QU54 | HT30001000 | Transistor 2SC536SP(F, G) etc. |
| | | **PU54-MISCELLANEOUS** |
| JU51 | YJ06002270 | Jack, 8P |
| JU52 | YJ06002450 | Jack, 6P |
| JU54 | YJ06002390 | Jack, 5P |
| JU55 | YJ06002390 | Jack, 5P |
| JU56 | YJ06002390 | Jack, 5P |
| WU52 | YU07220260 | Jumper Lead, 7P |
| WU53 | YU04240260 | Jumper Lead, 4P |
| WU54 | YU06460260 | Jumper Lead, 6P |
| XU51 | FQ04003010 | Seramic Viblator, CSB400P |
| | | **PW04-REMOTE PAUSE OUT CIRCUIT BOARD** |
| PW04 | YK349H1980 | P.W. Board, Remote Pause Out |
| JW01 | YT02020510 | Terminal, 2P; RCA |
| WW01 | YU02720260 | Jumper Lead, 2P |
| | | **PW54-PRE OUT/MAIN IN CIRCUIT BOARD** |
| PW54 | YK349H1650 | P.W. Board, Pre Out/Main In |
| DW51 | HD20002000 | Diode 1SS133, etc. |
| QW51 | HT10001000 | Transistor 2SA608SP(F, G), etc. |
| JW51 | YT02040610 | Terminal, 4P; RCA |
| JW52 | YT02020550 | Terminal, 2P; RCA |
| JW53 | YP06003330 | Plug, 3P |
| JW54 | YP06003330 | Plug, 3P |
| WW52 | YU03440260 | Jumper Lead, 3P |

| REF. DESIG. | PART NO. | DESCRIPTION |
|---|---|---|
| | | **PX04-SIG. METER/REMOTE RECEIVER CIRCUIT BOARD** |
| PX04 | YK349H1960 | P.W. Board, Sig. Meter/Remote Receiver |
| CX01 | DK18223310 | Ceramic Cap. 0.022μF +80% −20% |
| DQ51 | HI10061320 | L.E.D. GL1HD111 |
| DX01 ~ DX06 | HI10050030 | L.E.D. SLP151B-60 |
| QQ51 | HW10001550 | Photo Unit |
| QX01 | HC10065020 | IC AN6875 |
| QX02 | HT10001000 | Transistor 2SA608SP(F, G), etc. |
| QX03 | HT30001000 | Transistor 2SC536SP(F, G), etc. |
| SQ51 | SP01011000 | Push Switch, Standby |
| WQ51 | YU04180260 | Jumper Lead, 4P |
| WX01 | YU06460260 | Jumper Lead, 6P |
| | | **PX54-POWER METER FUNCTION IND. CIRCUIT BOARD** |
| PX54 | YK349H1640 | P.W. Board, Power Meter Function Ind. |
| | | **PX54-RESISTORS** |
| RU74 | GG05103160 | 10KΩ ±5% 1/6W |
| RU78 | GG05152140 | 1.5KΩ ±5% ¼W |
| | | **PX54-SEMICONDUCTORS** |
| DU71 | HI10034320 | L.E.D. GL-9EG14 |
| DU72 | HI10034320 | L.E.D. GL-9EG14 |
| DU73 | HI10034320 | L.E.D. GL-9EG14 |
| DU74 | HI10034320 | L.E.D. GL-9EG14 |
| DU75 | HI10028320 | L.E.D. GL-9HD4 |
| DU76 | HI10028320 | L.E.D. GL-9HD4 |
| DU77 | HI10028320 | L.E.D. GL-9HD4 |
| DX51 ~ DX64 | HI10034320 | L.E.D. GL-9EG14 |
| QU71 ~ QU77 | HT30001000 | Transistor 2SC536SP(F, G), etc. |
| QX51 | HC10013320 | IC IR2E19 |
| QX52 | HC10013320 | IC IR2E19 |
| | | **PX54-MISCELLANEOUS** |
| SU71 | SP01011000 | Push Switch, VCR21LV |
| SU72 | SP01011000 | Push Switch, CD |
| SU73 | SP01011000 | Push Switch, Tuner |
| SU74 | SP01011000 | Push Switch, Photo |
| WU71 | YU08100260 | Jumper Lead, 8P |
| WU72 | YU06100260 | Jumper Lead, 6P |
| WX51 | YU04140260 | Jumper Lead, 4P |

| REF. DESIG. | PART NO. | DESCRIPTION |
|---|---|---|
| | | **P104-TUNER CIRCUIT BOARD** |
| P104 | YK148H0210 | P.W. Board, Tuner |
| | | **P104-CAPACITORS** |
| CA01 | DK18103310 | Ceramic 0.01μF +80% −20% |
| CA02 | CT12000090 | Trimming 20pF |
| CA03 | DK18223310 | Ceramic 0.022μF +80% −20% |
| CA05 | DK18103310 | Ceramic 0.01μF +80% −20% |
| CA08 | DF15391550 | Film 390pF ±5% |
| CA19 | DK18223310 | Ceramic 0.022μF +80% −20% |
| CA22 | DK18223310 | Ceramic 0.022μF +80% −20% |
| CA24 | DK18223310 | Ceramic 0.022μF +80% −20% |
| CA26 | DK18103310 | Ceramic 0.01μF +80% −20% |
| CA27 | DK18103310 | Ceramic 0.01μF +80% −20% |
| CA29 | DK18103310 | Ceramic 0.01μF +80% −20% |
| CA31 | DK18103310 | Ceramic 0.01μF +80% −20% |
| CA33 | DK18103310 | Ceramic 0.01μF +80% −20% |
| CA37 | DK18103310 | Ceramic 0.01μF +80% −20% |
| CA43 | DK18223310 | Ceramic 0.022μF +80% −20% |
| C201 | DK18103310 | Ceramic 0.01μF +80% −20% |
| C202 | DK18103310 | Ceramic 0.01μF +80% −20% |
| C203 | DK18223310 | Ceramic 0.022μF +80% −20% |
| C204 | DK18223310 | Ceramic 0.022μF +80% −20% |
| C207 | DK18223310 | Ceramic 0.022μF +80% −20% |
| C209 | DK18223310 | Ceramic 0.022μF +80% −20% |
| C212 | DK18473310 | Ceramic 0.047μF +80% −20% |
| C213 | DK18223310 | Ceramic 0.022μF +80% −20% |
| C214 | DK18223310 | Ceramic 0.022μF +80% −20% |
| C215 | DK18223310 | Ceramic 0.022μF +80% −20% |
| C217 | DK18223310 | Ceramic 0.022μF +80% −20% |
| C219 | DK18103310 | Ceramic 0.01μF +80% −20% |
| C303 | DF15471550 | Film 470pF ±5% |
| C503 | DK18103310 | Ceramic 0.01μF +80% −20% |
| C507 | DK18223310 | Ceramic 0.022μF +80% −20% |
| | | **P104-RESISTORS** |
| RA24 | RA02230600 | 22KΩ, Trimming |
| RA43 | NH05101140 | 100Ω ±5% ¼W, Fusible |
| R203 | GG05101140 | 100Ω ±5% ¼W |
| R214 | GG05101140 | 100Ω ±5% ¼W |
| R215 | RA04730600 | 47KΩ, Trimming |
| R303 | RA04720600 | 4.7KΩ, Trimming |
| R306 | GG05181140 | 180Ω ±5% ¼W |
| R317 | RA02240600 | 220KΩ, Trimming |
| | | **P104-SEMICONDUCTORS** |
| DA01 | HD40006030 | Varicap SVC321SP |
| DA03 | HD40006030 | Varicap SVC321SP |
| DA09 | HD20002000 | Diode 1SS133, etc. |
| D201 | HD20002000 | Diode 1SS133, etc. |
| QA01 | HF200551D0 | F.E.T. 2SK55(D) |
| QA03 | HC10058030 | IC LA1245 |
| QA09 | HT10001000 | Transistor 2SA608SP(F, G), etc. |
| Q201 | HT308291C0 | Transistor 2SC829(C) |
| Q202 | HC10028030 | IC LA1231N |
| Q203 | HT30001000 | Transistor 2SC536SP(F, G), etc. |
| Q204 | HT30001000 | Transistor 2SC536SP(F, G), etc. |
| Q205 | HT30001000 | Transistor 2SC536SP(F, G), etc. |
| Q206 | HT10001000 | Transistor 2SA608SP(F, G), etc. |

| REF. DESIG. | PART NO. | DESCRIPTION | | |
|---|---|---|---|---|
| Q301 | HC10046020 | IC | AN7470 | |
| Q302 | HT10001000 | Transistor | 2SA608SP(F, G), etc. | |
| Q303 | HT30001000 | Transistor | 2SC536SP(F, G), etc. | |
| Q304 | HT30001000 | Transistor | 2SC536SP(F, G), etc. | |
| Q305 | HT30001000 | Transistor | 2SC536SP(F, G), etc. | |
| Q501 | HC10164030 | IC | LM7000N | |
| Q503 | HF200300B0 | F.E.T. | 2SK30A(Y1) | |
| Q504 | HT30001000 | Transistor | 2SC536SP(F, G), etc. | |
| Q505 | HT30001000 | Transistor | 2SC536SP(F, G), etc. | |
| | | **P104-MISCELLANEOUS** | | |
| A101 | AV01202130 | V.H.F. Tuner, FE306-A14 | | |
| FA01 | FF10045320 | Ceramic Filter, SFZ450F3L | | |
| FA02 | FF10045270 | Ceramic Filter, BFU450C | | |
| F201 | FF11070610 | Ceramic Filter, SFE10.7MA8-A | | |
| F202 | FF11070620 | Ceramic Filter, SFE10.7MS3-A | | |
| J101 | YT01040290 | Terminal, Antenna | | |
| J203 | YL01010110 | Terminal, Earth Lug | | |
| J204 | YL01010110 | Terminal, Earth Lug | | |
| J205 | YL01010110 | Terminal, Earth Lug | | |
| J206 | YL01010110 | Terminal, Earth Lug | | |
| J304 | YJ06002450 | Jack, 6P | | |
| LA01 | LA10295140 | Antenna Coil, AM | | |
| LA02 | LO10013170 | OSC Coil, AM | | |
| LA05 | LI10013210 | I.F.T. Coil, AM | | |
| L201 | LI20029040 | I.F.T. Coil, FM DET | | |
| W303 | YU04240260 | Jumper Lead, 4P | | |
| W501 | YU05420260 | Jumper Lead, 5P | | |
| W502 | YU07460260 | Jumper Lead, 7P | | |
| X501 | XI01150010 | Crystal, 7.2MHz | | |
| | | **P704-MAIN AMP/POWER SUPPLY CIRCUIT BOARD** | | |
| P704 | YK349H1610 | P.W. Board, Main Amp/Power Supply | | |
| | | **P704-CAPACITORS** | | |
| CN01 | EA47410010 | Elect | 0.47μF | 100V |
| C717 | EA10710010 | Elect | 100μF | 100V |
| C718 | EA10710010 | Elect | 100μF | 100V |
| ⚠C801 | EB10908030 | Elect | 10000μF | 80V |
| ⚠C802 | EB10908030 | Elect | 10000μF | 80V |
| C809 | DK18103560 | Ceramic | 0.01μF | +80% −20% |
| C810 | DK18103560 | Ceramic | 0.01μF | +80% −20% |
| C811 | DK18103310 | Ceramic | 0.01μF | +80% −20% |
| C812 | DK18103310 | Ceramic | 0.01μF | +80% −20% |
| | | **P704-RESISTORS** | | |
| RK01 | GG05820140 | 82Ω | ±5% | ¼W |
| RK03 | GG05820140 | 82Ω | ±5% | ¼W |
| RK11 | GP05102070 | 1KΩ | ±5% | 7W |
| RN18 | GG05820140 | 82Ω | ±5% | ¼W |
| RX89 | RA02220750 | 22KΩ(B), Trimming | | |
| RX90 | RA02220750 | 22KΩ(B), Trimming | | |

| REF. DESIG. | PART NO. | DESCRIPTION | | |
|---|---|---|---|---|
| R717 | RA04710750 | 470Ω(B), Trimming | | |
| R718 | RA04710750 | 470Ω(B), Trimming | | |
| R719 ~ R722 | GG05221140 | 220Ω | ±5% | ¼W |
| R723 | GG05221120 | 220Ω | ±5% | ½W |
| R724 | GG05221120 | 220Ω | ±5% | ½W |
| R725 ~ R732 | GG05022140 | 2.2Ω | ±5% | ½W |
| R733 | BW10000020 | 0.33Ω×2 | ±5% | 5W, Composite |
| R734 | BW10000020 | 0.33Ω×2 | ±5% | 5W, Composite |
| R735 | BW10000020 | 0.33Ω×2 | ±5% | 5W, Composite |
| R736 | BW10000020 | 0.33Ω×2 | ±5% | 5W, Composite |
| R737 | GG05022120 | 2.2Ω | ±5% | ½W |
| R738 | GG05022120 | 2.2Ω | ±5% | ½W |
| R739 | GA05047030 | 4.7Ω | ±5% | 3W |
| R740 | GA05047030 | 4.7Ω | ±5% | 3W |
| ⚠R741 | GA05151020 | 150Ω | ±5% | 2W [TA170AV] |
| | GA05181020 | 180Ω | ±5% | 2W [TA135AV] |
| ⚠R742 | GA05151020 | 150Ω | ±5% | 2W [TA170AV] |
| | GA05181020 | 180Ω | ±5% | 2W [TA135AV] |
| ⚠R743 | NF02270140 | 27Ω | ±2% | ¼W, Fuse[TA170AV] |
| | NF02470140 | 47Ω | ±2% | ¼W, Fuse[TA135AV] |
| ⚠R744 | NF02270140 | 27Ω | ±2% | ¼W, Fuse[TA170AV] |
| | NF02470140 | 47Ω | ±2% | ¼W, Fuse[TA135AV] |
| ⚠R801 | GA05271010 | 270Ω | ±5% | 1W |
| ⚠R802 | GA05121010 | 120Ω | ±5% | 1W |
| ⚠R803 | NH05121140 | 120Ω | ±5% | ¼W, Fusible |
| ⚠R806 | NH05100120 | 10Ω | ±5% | ½W, Fusible |
| ⚠R807 | NH05010120 | 1Ω | ±5% | ½W, Fusible |
| ⚠R808 | NH05010120 | 1Ω | ±5% | ½W, Fusible |
| ⚠R809 | GA05100030 | 10Ω | ±5% | 3W |
| ⚠R810 | NY05100140 | 10Ω | ±5% | ¼W, Fusible |
| | | **P704-SEMICONDUCTORS** | | |
| DK01 | HD20002000 | Diode | 1SS133, etc. | |
| DN01 | HD20003000 | Diode | DSF10C, etc. | |
| DN02 | HD20003000 | Diode | DSF10C, etc. | |
| DN03 | HD20004000 | Diode | | |
| DN04 | HD20004000 | Diode | | |
| DX81 | AD20002000 | Diode | 1SS133, etc. | |
| DX82 | HD20002000 | Diode | 1SS133, etc. | |
| DX83 | HD20002000 | Diode | 1SS133, etc. | |
| DX84 | HD20002000 | Diode | 1SS133, etc. | |
| D701 | HD20002000 | Diode | 1SS133, etc. | |
| D702 | HD20002000 | Diode | 1SS133, etc. | |
| D751 | HD20002000 | Diode | 1SS133, etc. | |
| D752 | HD20002000 | Diode | 1SS133, etc. | |
| ⚠D801 | HE20012290 | Diode | D5FB20 | |
| ⚠D802 | HD20003000 | Diode | DSF10C, etc. | |
| ⚠D803 | HD20003000 | Diode | DSF10C, etc. | |
| ⚠D804 | HD20003000 | Diode | DSF10C, etc. | |
| ⚠D805 | HD20003000 | Diode | DSF10C, etc. | |
| D806 | HD30005020 | Zener | MA1056 | |
| D807 | HD30012020 | Zener | MA1150 | |
| D808 | HD30015020 | Zener | MA1240 | |
| ⚠D809 | HD20003000 | Diode | DSF10C, etc. | |
| ⚠D810 | HD20003000 | Diode | DSF10C, etc. | |
| ⚠D811 | HD20003000 | Diode | DSF10C, etc. | |
| ⚠D812 | HD20003000 | Diode | DSF10C, etc. | |

| REF. DESIG. | PART NO. | DESCRIPTION | |
|---|---|---|---|
| | | **P704-SEMICONDUCTORS** | |
| QK01 | HW10004320 | Photo Unit | PC-827 |
| QK02 | HT309452A0 | Transistor | 2SC945(P, Q) |
| QK03 | HT325512A0 | Transistor | 2SC2551(R, O) |
| QK04 | HT325512A0 | Transistor | 2SC2551(R, O) |
| QN01 | HC10042050 | IC | TA7317P |
| QN02 | HT109701A0 | Transistor | 2SA970(GR) |
| QN03 | HT322402A0 | Transistor | 2SC2240(GR, BL) |
| QN04 | HT322402A0 | Transistor | 2SC2240(GR, BL) |
| ⚠Q701 | HC10141030 | IC | STK3122-3 [TA170AV] |
| | HC10181030 | IC | STK3102-3 [TA135AV] |
| Q703 | HT309452A0 | Transistor | 2SC945(P, Q) |
| Q704 | HT309452A0 | Transistor | 2SC945(P, Q) |
| ⚠Q705 | HT332982D0 | Transistor | 2SC3298(O, Y) |
| ⚠Q706 | HT332982D0 | Transistor | 2SC3298(O, Y) |
| ⚠Q707 | HT113062D0 | Transistor | 2SA1306(O, Y) |
| ⚠Q708 | HT113062D0 | Transistor | 2SA1306(O, Y) |
| ⚠Q709 | HT332802A0 | Transistor | 2SC3280(R, O)[TA170AV] |
| | HT331822A0 | Transistor | 2SC3182(R, O)[TA135AV] |
| ⚠Q710 | HT332802A0 | Transistor | 2SC3280(R, O)[TA170AV] |
| | HT331822A0 | Transistor | 2SC3182(R, O)[TA135AV] |
| ⚠Q711 | HT332802A0 | Transistor | 2SC3280(R, O)[TA170AV] |
| | HT331822A0 | Transistor | 2SC3182(R, O)[TA135AV] |
| ⚠Q712 | HT332802A0 | Transistor | 2SC3280(R, O)[TA170AV] |
| | HT331822A0 | Transistor | 2SC3182(R, O)[TA135AV] |
| ⚠Q713 | HT113012A0 | Transistor | 2SA1301(R, O)[TA170AV] |
| | HT112652A0 | Transistor | 2SA1265(R, O)[TA135AV] |
| ⚠Q714 | HT113012A0 | Transistor | 2SA1301(R, O)[TA170AV] |
| | HT112652A0 | Transistor | 2SA1265(R, O)[TA135AV] |
| ⚠Q715 | HT113012A0 | Transistor | 2SA1301(R, O)[TA170AV] |
| | HT112652A0 | Transistor | 2SA1265(R, O)[TA135AV] |
| ⚠Q716 | HT113012A0 | Transistor | 2SA1301(R, O)[TA170AV] |
| | HT112652A0 | Transistor | 2SA1265(R, O)[TA135AV] |
| Q751 | HT413022B0 | Transistor | 2SD1302(S, T) |
| Q752 | HT413022B0 | Transistor | 2SD1302(S, T) |
| Q753 | HT10001000 | Transistor | 2SA608SP(F, G), etc. |
| Q754 | HT30001000 | Transistor | 2SC536SP(F, G), etc. |
| ⚠Q801 | HC38515090 | IC | NJM78M15A |
| | | **P704-MISCELLANEOUS** | |
| JX01 | YJ06002440 | Jack, 4P | |
| J701 | YT03080040 | Terminal, 8P; SP. Out | |
| J703 | YJ06002430 | Jack, 3P | |
| J801 | YJ06002440 | Jack, 4P | |
| J809 | YL01010110 | Terminal, GND | |
| ⚠LN01 | LY20240150 | Relay | |
| L701 | LL23905120 | Coil, 1μH | |
| L702 | LL23905120 | Coil, 1μH | |
| W701 | YB00220230 | Connective Cord | |
| W801 | YU05200260 | Jumper Lead, 5P | |

| REF. DESIG. | PART NO. | DESCRIPTION | |
|---|---|---|---|
| | | **P854-BACK-UP POWER SUPPLY CIRCUIT BOARD** | |
| P854 | YK349H1660 | P.W. Board, Back-Up Power Supply | |
| | | **P854-CAPACITORS** | |
| C851 | DK18103310 | Ceramic | 0.01μF +80% −20% |
| C852 | DK18103310 | Ceramic | 0.01μF +80% −20% |
| C853 | DK18103840 | Ceramic | 0.01μF +100% 0, 400V |
| | | **P854-RESISTOR** | |
| R851 | GA05271020 | 270Ω ±5% 2W | |
| | | **P854-SEMICONDUCTORS** | |
| ⚠D851 ~ ⚠D856 | HD20003000 | Diode | DSF10C, etc. |
| D857 | HD30005020 | Zener | MA1056 |
| ⚠Q851 | HC38515090 | IC | NJM78M15 |
| ⚠Q852 | HC39515090 | IC | NJM79M15 |
| Q853 | HT30001000 | Transistor | 2SC536SP(F, G), etc. |
| Q854 | HT30001000 | Transistor | 2SC536SP(F, G), etc. |
| Q855 | HT10001000 | Transistor | 2SA608SP(F, G), etc. |
| Q856 | HT30001000 | Transistor | 2SC536SP(F, G), etc. |
| Q857 | HT10001000 | Transistor | 2SA608SP(F, G), etc. |
| Q858 | HT30001000 | Transistor | 2SC536SP(F, G), etc. |
| | | **P854-MISCELLANEOUS** | |
| J863 | YJ06002440 | Jack, 4P | |
| J864 | YL01010110 | Terminal, Ground | |
| ⚠L851 | LY10240130 | Relay | |
| W851 | YU03560260 | Jumper Lead, 3P | |

| | |
|---|---|
| (W01-99) | Assembly and Wiring |
| (T01-99) | Adjustment |
| (X01-00) | Correction |

**NOTE ON SAFETY:**
**Symbol ⚠ Fire or electrical shock hazard. Only original parts should be used to replace any part marked with symbol ⚠. Any other component substitution (other than original type), may increase risk of fire or electrical shock hazard.**

## 11. TECHNICAL SPECIFICATIONS

| | Model TA135AV | Model TA170AV |
|---|---|---|
| **AMPLIFIER SECTION:** | | |
| Rated Power Output, Minimum Continuous Watts per Channel, both Channels driven into 8 ohms | 135 W/Channel | 170 W/Channel |
| Power Bandwidth | 20 Hz – 20 kHz | 20 Hz – 20 kHz |
| Total Harmonic Distortion | 0.05% | 0.05% |
| I.M. Distortion | 0.05% | 0.05% |
| **PREAMPLIFIER SECTION:** | | |
| Phono | | |
| Input Overload at 1 kHz | 120 mV | 120 mV |
| High Level Inputs (Tuner, Tape, CD) | | |
| Input Sensitivity/Impedance | 150 mV/25 k ohms | 150 mV/25 k ohms |
| **TUNER SECTION:** | | |
| **FM** | | |
| IHF Usable Sensitivity | 12.1 dBf | 12.1 dBf |
| Signal to Noise Ratio at 65 dBf (Mono/Stereo, 98 MHz) | 75/64 dB | 75/64 dB |
| Distortion at 65 dBf (Mono/Stereo, 1 kHz) | 0.15%/0.3% | 0.15%/0.3% |
| Stereo Separation at 1 kHz | 42 dB | 42 dB |
| Capture Ratio at 98 MHz | 1.5 dB | 1.5 dB |
| Frequency Response, 30 Hz – 15 kHz | ±1 dB | ±1 dB |
| Alternate Channel Selectivity | 50 dB | 50 dB |
| **AM** | | |
| IHF Usable Sensitivity | 20 μV | 20 μV |
| Signal to Noise Ratio | 50 dB | 50 dB |
| Alternate Channel Selectivity | 55 dB | 55 dB |
| **GENERAL:** | | |
| Power Requirements | 120 V, 60 Hz | 120 V, 60 Hz |
| Unit Dimensions | | |
| Panel Width | 420 mm (16-1/2 inches) | 420 mm (16-1/2 inches) |
| Panel Height | 185 mm (7-9/32 inches) | 185 mm (7-9/32 inches) |
| Depth | 320 mm (12-19/32 inches) | 320 mm (12-19/32 inches) |
| Weight | 13.5 kg (29.7 lbs) | 15.5 kg (34.1 lbs) |

# Model TA135AV/TA170AV

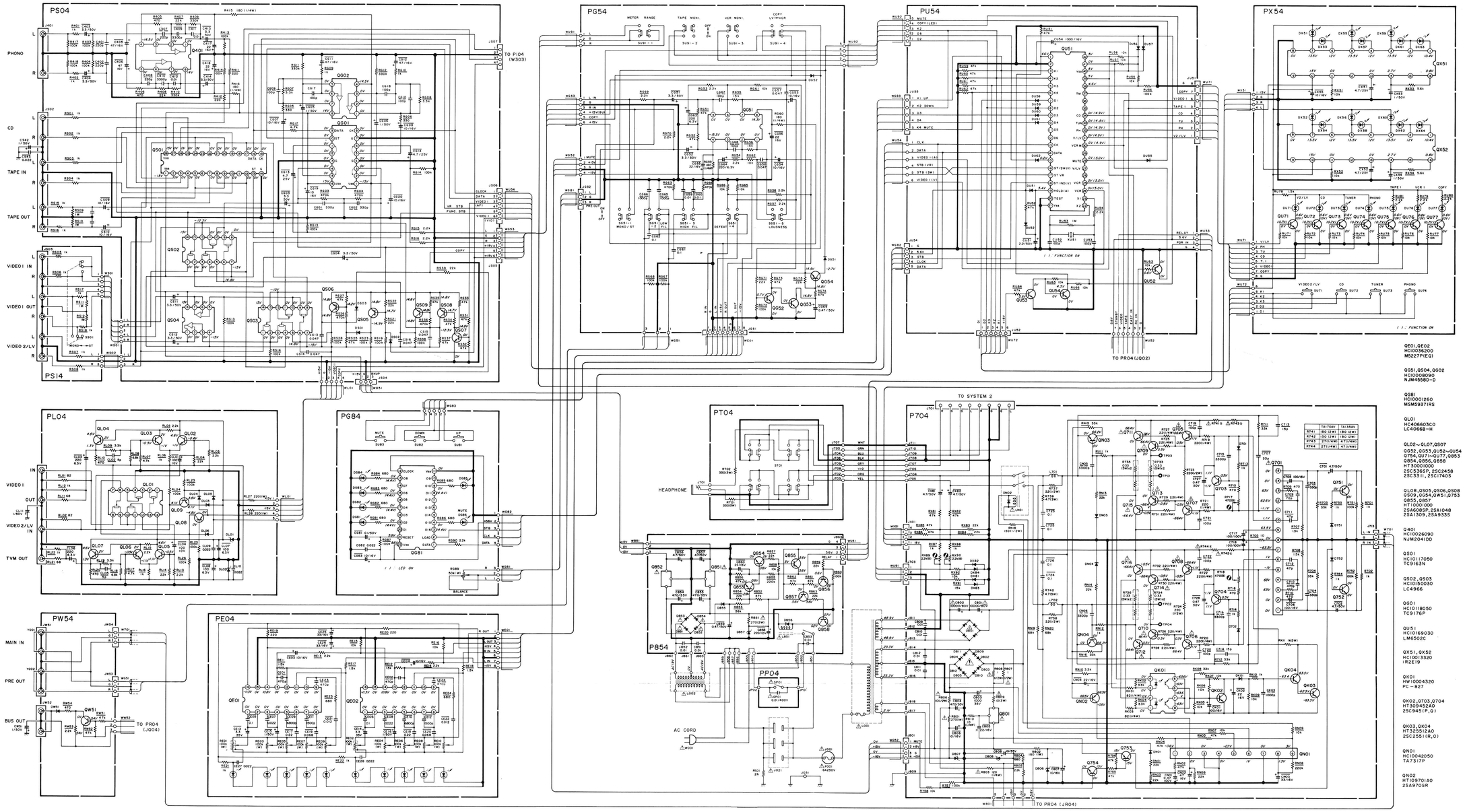


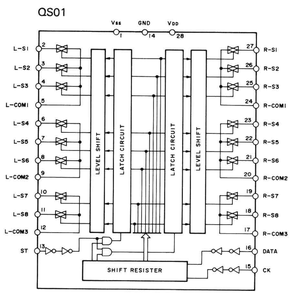


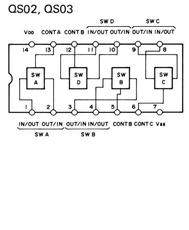


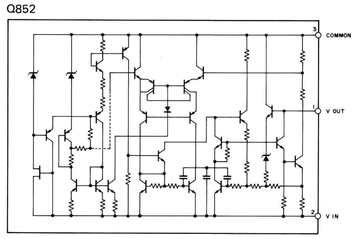


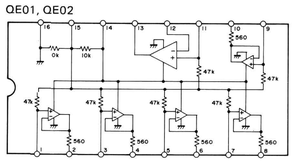


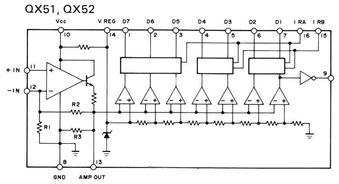


**NOTE ON SAFETY :**
**Symbol ⚠ Fire or electrical shock hazard. Only original parts should be used to replace any part marked with symbol ⚠. Any other component substitution (other than original type), may increase risk of fire or electrical shock hazard.**

**Components and wiring are subject to change for modification without notice.**

**"SERVICE INFORMATION IS FOR USE BY QUALIFIED RERSONNEL ONLY – ANY MISADJUSTMENT OR MISALIGNMENT MAY BE TREATED AS A NON-WARRANTY REPAIR BY ANY MARANTZ SERVICE CENTRE – "**

**Kind of Common Parts**

**RESISTOR**

R*** (1) GD05 - - - 140, Carbon film fixed resistor, ±5% 1/4W
R*** (2) GD05 - - - 160, Carbon film fixed resistor, ±5% 1/6W

C*** : **CERAMIC CAP.**
(1) DD1 - - - - 370, Ceramic condenser, disc type (titan condenser) Temp. coeff. P350 ~ N1000 50V

C*** : **CERAMIC CAP.**
(1) DK16 - - - 300, High dielectric constant ceramic condenser, disc type (titan variable) Temp. chara. 2B4 50V

C*** : **ELECTROLY CAP. ( ⇶ ) / FILM CAP. ( ⇌ )**
(1) EA - - - - - - 10, Electrolytic condenser, one-way lead type, tolerance ±20%
(2) DF15 - - - 350, Plastic film condenser, one-way type, Mylar, ±5% 50V

* In case of ordering the common parts, please establish the correct parts number of 10 figures by the procedure "ASSIGNMENT OF COMMON PARTS CODES"

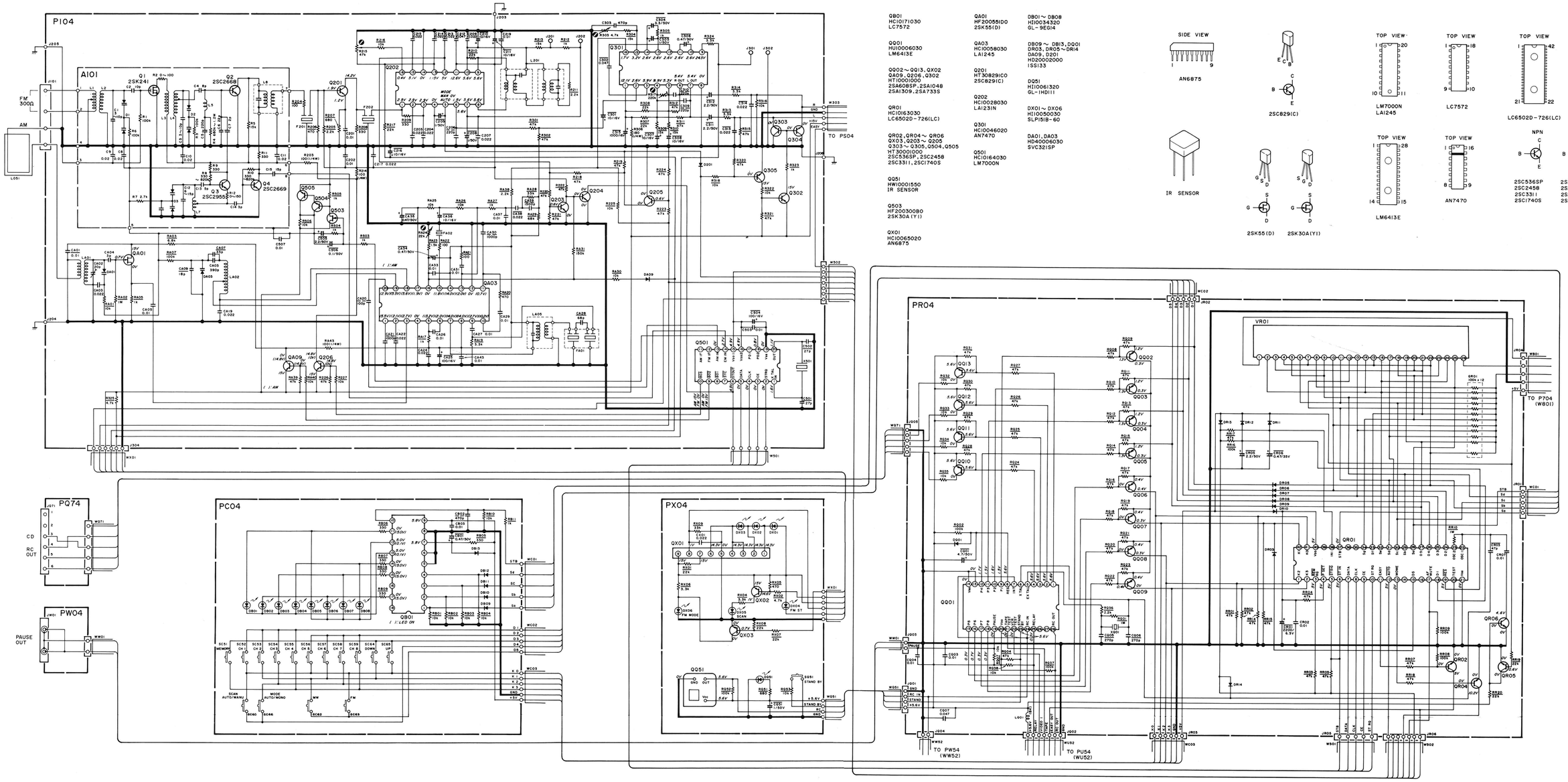


QB01
HC10171030
LC7572

QQ01
HU10006030
LM6413E

QQ02～QQ13, QX02
QA09, QQ06, QS02
HT10001000
2SA608SP, 2SA1048
2SA1309, 2SA733S

QR01
HC10163030
LC6502D-726(LC)

QR02, QR04～QR06
QX03, QQ03～QQ05
QS03～QS08, QS04, QS05
HT30001000
2SC536SP, 2SC2458
2SC3311, 2SC1740S

QQ51
HW10001550
IR SENSOR

QS03
HF200300B0
2SK30A(Y1)

QX01
HC10065020
AN6875

QA01
HF200551D0
2SK55(D)

QA03
HC10058030
LA1245

QQ01
HT30829IC0
2SC829(C)

QQ02
HC10028030
LA123IN

QQ30
HC10046020
AN7470

QS01
HC10164030
LM7000N

DB01～DB08
HI10034320
GL-9EG14

DB09～DB13, DQ01
DR03, DR05～DR14
DA09, DZ01
HD20002000
1SS133

DQ51
HI10061320
GL-1HD111

DX01～DX06
HI10050030
SLP151B-60

DA01, DA03
HD40006030
SVC321SP

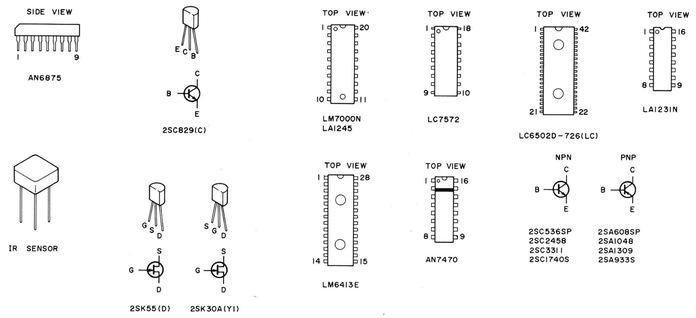


**"SERVICE INFORMATION IS FOR USE BY QUALIFIED RERSONNEL ONLY – ANY MISADJUSTMENT OR MISALIGNMENT MAY BE TREATED AS A NON-WARRANTY REPAIR BY ANY MARANTZ SERVICE CENTRE – "**

**NOTE ON SAFETY :**
**Symbol ⚠ Fire or electrical shock hazard. Only original parts should be used to replace any part marked with symbol ⚠. Any other component substitution (other than original type), may increase risk of fire or electrical shock hazard.**

**Components and wiring are subject to change for modification without notice.**

## Kind of Common Parts

**RESISTOR**

R*** (1) GD05 - - - 140, Carbon film fixed resistor, ±5% 1/4W
R*** (2) GD05 - - - 160, Carbon film fixed resistor, ±5% 1/6W

C*** : **CERAMIC CAP.**
(1) DD1 - - - - 370, Ceramic condenser, disc type (titan condenser) Temp. coeff. P350 ～ N1000 50V

C*** : **CERAMIC CAP.**
(1) DK16 - - - 300, High dielectric constant ceramic condenser, disc type (titan variable) Temp. chara. 2B4 50V

C*** : **ELECTROLY CAP. ( ⧺ ) / FILM CAP. ( ⧦ )**
(1) EA - - - - - - 10, Electrolytic condenser, one-way lead type, tolerance ±20%
(2) DF15 - - - 350, Plastic film condenser, one-way type, Mylar, ±5% 50V

* In case of ordering the common parts, please establish the correct parts number of 10 figures by the procedure "ASSIGNMENT OF COMMON PARTS CODES"

marantz®

Printed in Japan

349H855010 SO
1987/5